Brought to you by BirfMark

TOYOTA

LAND CRUISER Station Wagon

ELECTRICAL WIRING DIAGRAM

1996 MODEL

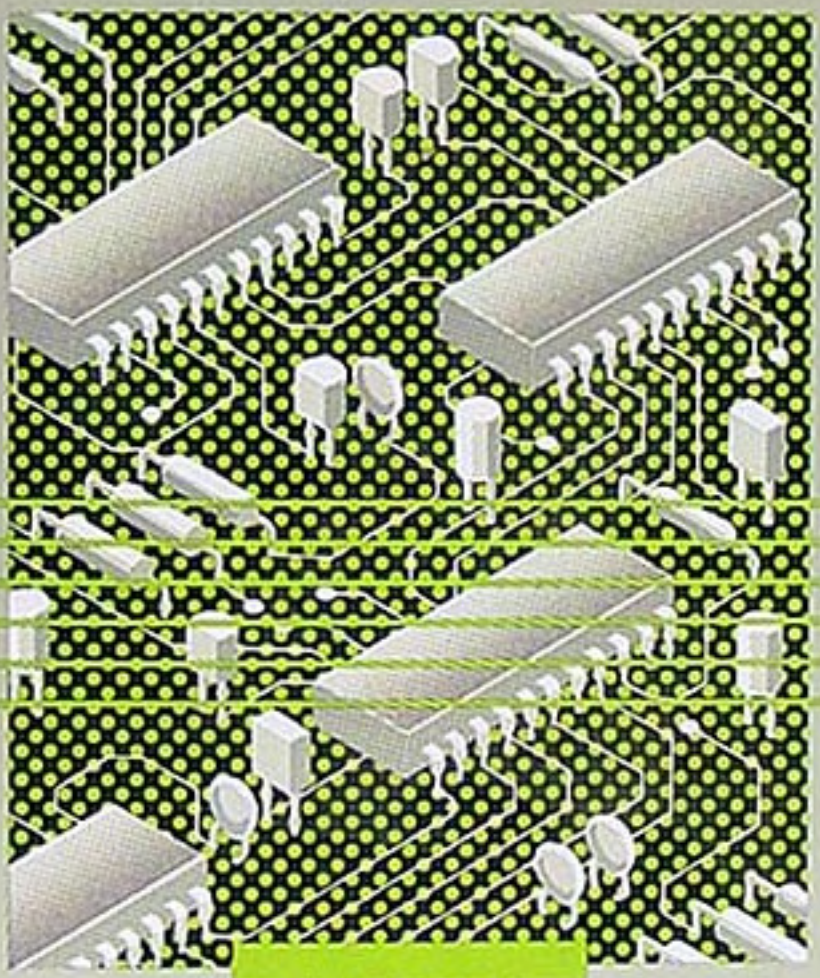

Brought to you by BirfMark

A INTRODUCTION

This manual consists of the following 11 sections:

No.	Section	Description
A	INDEX	Index of the contents of this manual.
	INTRODUCTION	Brief explanation of each section.
B	HOW TO USE THIS MANUAL	Instructions on how to use this manual.
C	TROUBLE-SHOOTING	Describes the basic inspection procedures for electrical circuits.
D	ABBREVIATIONS	Defines the abbreviations used in this manual.
E	GLOSSARY OF TERMS AND SYMBOLS	Defines the symbols and functions of major parts.
F	RELAY LOCATIONS	Shows position of the Electronic Control Unit, Relays, Relay Block, etc. This section is closely related to the system circuit.
G	ELECTRICAL WIRING ROUTING	Describes position of Parts Connectors, Splice points, Ground points, etc. This section is closely related to the system circuit.
H	POWER SOURCE (Current Flow Chart)	Describes power distribution from the power supply to various electrical loads.
I	INDEX	Index of the system circuits.
	SYSTEM CIRCUITS	Electrical circuits of each system are shown from the power supply through ground points. Wiring connections and their positions are shown and classified by code according to the connection method. (Refer to the section, “How to use this manual”). The “System Outline” and “Service Hints” useful for troubleshooting are also contained in this section.
J	GROUND POINTS	Shows ground positions of all the parts decribed in this manual.
K	OVERALL ELECTRICAL WIRING DIAGRAM	Provides circuit diagrams showing the circuit connections.

Brought to you by BirfMark

This manual provides information on the electrical circuits installed on vehicles by dividing them into a circuit for each system.

The actual wiring of each system circuit is shown from the point where the power source is received from the battery as far as each ground point. (All circuit diagrams are shown with the switches in the OFF position.)

When troubleshooting any problem, first understand the operation of the circuit where the problem was detected (see System Circuit section), the power source supplying power to that circuit (see Power Source section), and the ground points (see Ground Points section). See the System Outline to understand the circuit operation.

When the circuit operation is understood, begin troubleshooting of the problem circuit to isolate the cause. Use Relay Location and Electrical Wiring Routing sections to find each part, junction block and wiring harness connectors, wiring harness and wiring harness connectors, splice points, and ground points of each system circuit. Internal wiring for each junction block is also provided for better understanding of connection within a junction block.

Wiring related to each system is indicated in each system circuit by arrows (from __ ,to __). When overall connections are required, see the Overall Electrical Wiring Diagram at the end of this manual.

Brought to you by BirfMark

B HOW TO USE THIS MANUAL

* The system shown here is an EXAMPLE ONLY. It is different to the actual circuit shown in the SYSTEM CIRCUITS SECTION.

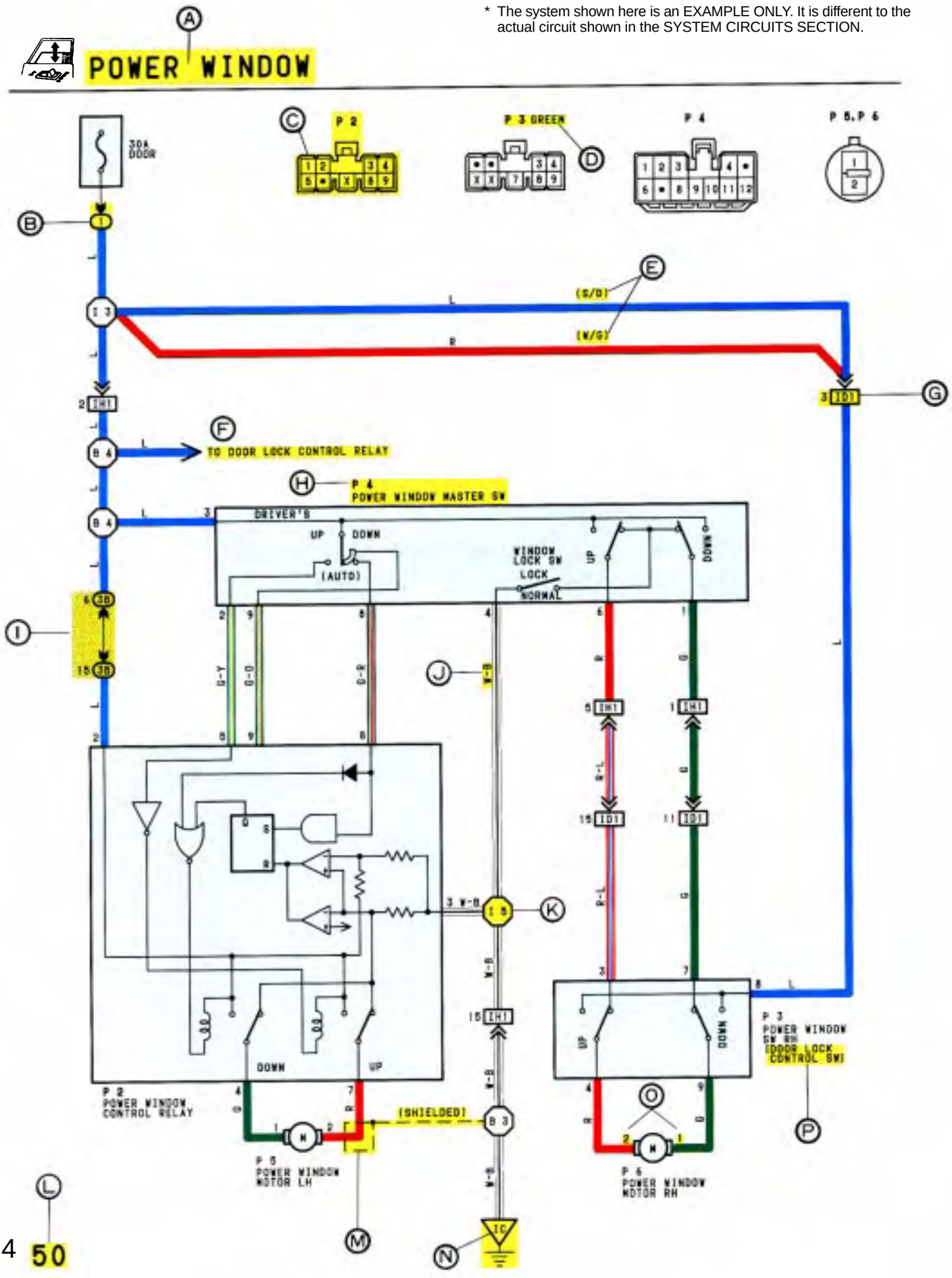

Ⓐ : System Title

Ⓑ : Indicates a Relay Block. No shading is used and only the Relay Block No. is shown to distinguish it from the J/B.

Example: Indicates Relay Block No. 1.

Ⓒ : Indicates the connector to be connected to a part (the numeral indicates the pin No.)

Explanation of pin use.

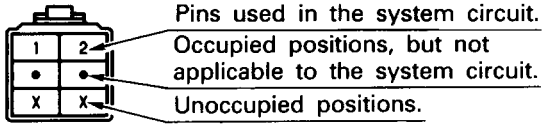

The pins shown are only for the highest grade, or only include those in the specification.

Ⓓ : Connector Color

Connectors not indicated are milky white in color.

Ⓔ : ( ) is used to indicate different wiring and connector, etc. when the vehicle model, engine type, or specification is different.

Ⓕ : Indicates related system.

Ⓖ : Indicates the wiring harness and wiring harness connector. The wiring harness with male terminal is shown with arrows (⩔).

Outside numerals are pin numbers.

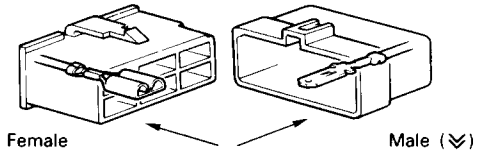

The first letter of the code for each wiring harness and wiring harness connector(s) indicates the component's location, e.g., "E" for the Engine Compartment, "I" for the Instrument Panel and Surrounding area, and "B" for the Body and Surrounding area.

When more than one code has the first and second letters in common, followed by numbers (e.g., IH1, IH2), this indicates the same type of wiring harness and wiring harness connector.

Ⓗ : Represents a part (all parts are shown in sky blue). The code is the same as the code used in parts position.

Ⓘ : Junction Block (The number in the circle is the J/B No. and the connector code is shown beside it). Junction Blocks are shaded to clearly separate them from other parts (different junction blocks are shaded differently for further clarification).

Example:

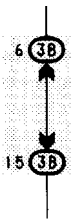

3B indicates that it is inside Junction Block No. 3.

Ⓙ : Indicates the wiring color.

Wire colors are indicated by an alphabetical code.

B	= Black	L	= Blue	R	= Red
BR	= Brown	LG	= Light Green	V	= Violet
G	= Green	O	= Orange	W	= White
GR	= Gray	P	= Pink	Y	= Yellow

The first letter indicates the basic wire color and the second letter indicates the color of the stripe.

Example: L - Y

(Blue) (Yellow)

Ⓚ : Indicates a wiring Splice Point (Codes are "E" for the Engine Room, "I" for the Instrument Panel, and "B" for the Body).

Example:

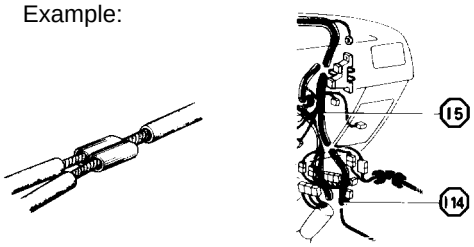

The Location of Splice Point I 5 is indicated by the shaded section.

Ⓛ : Page No.

Ⓜ : Indicates a shielded cable.

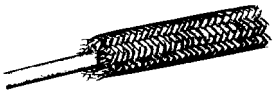

Ⓝ : Indicates a ground point.

The first letter of the code for each ground point(s) indicates the component's location, e.g., "E" for the Engine Compartment, "I" for the Instrument Panel and Surrounding area, and "B" for the Body and Surrounding area.

Ⓞ : Indicates the pin number of the connector.

The numbering system is different for female and male connectors.

Example:

Numbered in order from upper left to lower right

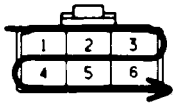

Female

Numbered in order from upper right to lower left

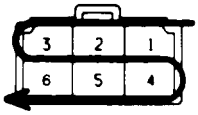

Male

Ⓟ : When 2 parts both use one connector in common, the parts connector name used in the wire routing section is shown in square brackets [ ].

B HOW TO USE THIS MANUAL

Q

SYSTEM OUTLINE

WITH THE IGNITION SW TURNED ON, THE CURRENT FLOWS TO **TERMINAL 3** OF THE POWER W NDOW MASTER SW, **TERMINAL 2** OF THE POWER W NDOW CONTROL RELAY AND **TERMINAL 8** OF THE POWER WINDOW SW THROUGH THE **DOOR** FUSE.

1. DRIVER'S WINDOW "MANUAL UP" OPERATION BY MASTER SW

HOLDING MANUAL SW (DRIVER'S) ON "UP" POSITION LOCATED N POWER W NDOW MASTER SW, THE CURRENT FLOWS TO **TERMINAL 5** OF THE POWER W NDOW CONTROL RELAY THROUGH **TERMINAL 3** OF THE MASTER SW → **TERMINAL 2** TO OPERATE A POWER W NDOW CONTROL RELAY. THUS THE CURRENT INSIDE THE RELAY FLOWS FROM **TERMINAL 2** OF THE RELAY → **TERMINAL 1** → **TERMINAL 2** OF THE POWER WINDOW MOTOR → **TERMINAL 1** → **TERMINAL 4** OF THE RELAY → **TERMINAL 3** → TO **GROUND**. THE MOTOR TURNS TO ASCENT THE WINDOW. RELEASING THIS SW, THE ROTATION OF MOTOR IS STOPPED AND THE W NDOWS CAN STOP AT WILL POINT.

(FOR THE "MANUAL DOWN" OPERATION, CURRENT FLOWS IN THE REVERSE DIRECTION BECAUSE THE TERMINALS WHERE IT FLOW ARE CHANGED).

2. DRIVER'S WINDOW "AUTO DOWN" OPERATION BY MASTER SW

ONCE THE "AUTO DOWN" BUTTON OF THE MASTER SW IS PUSHED, THE CURRENT FLOW **TERMINAL 9** OF THE POWER WINDOW CONTROL RELAY THROUGH **TERMINAL 3** OF THE MASTER SW → **TERMINALS 8** AND **9** TO OPERATE THE RELAY. THUS THE CURRENT NSIDE THE POWER WINDOW CONTROL RELAY FLOWS FROM **TERMINAL 2** OF THE RELAY → **TERMINAL 4** → **TERMINAL 1** OF THE POWER W NDOW MOTOR → **TERMINAL 2** → **TERMINAL 1** OF THE RELAY → **TERMINAL 3** → TO **GROUND**. THE MOTOR CONTINUES THE ROTATION ENABLING TO DESCENT THE W NDOW.

THE W NDOW DESCENDS TO THE END POSITION. THE CURRENT WILL BE CUT OFF TO RELEASE THE AUTO DOWN FUNCTION BASED ON THE INCREASING CURRENT BETWEEN **TERMINAL 2** OF THE RELAY AND **TERMINAL 1** N RELAY.

3. DRIVER'S WINDOW AUTO DOWN RELEASE OPERATION BY MASTER SW

HOLDING THE MANUAL SW (DRIVER'S) ON "UP" POSITION N OPERAT NG AUTO DOWN. THE CURRENT FROM **TERMINAL 3** OF THE MASTER SW PASS NG **TERMINAL 2** FLOWS **TERMINAL 5** OF THE RELAY AND RELEASES THE AUTO DOWN FUNCTION N THE POWER WINDOW CONTROL RELAY. RELEASING THE HAND FROM SW, WINDOW STOPS AND CONT NUING ON TOUCHING SW, THE FUNCTION SWITCHES TO MANUAL UP OPERATION.

4. PASSENGER'S WINDOW UP OPERATION (MASTER SW) AND WINDOW LOCK SW OPERATION

HOLDING PASSENGER'S WINDOW SW (MASTER SW) ON "UP", THE CURRENT FLOWS FROM **TERMINAL 3** OF THE MASTER SW PASSING **TERMINAL 6** TO **TERMINAL 3** OF THE POWER WINDOW SW (PASSENGER'S) → **TERMINAL 4** → **TERMINAL 2** OF THE MOTOR → **TERMINAL 1** → **TERMINAL 9** OF THE POWER W NDOW SW → **TERMINAL 7** → **TERMINAL 1** OF THE MASTER SW → **TERMINAL 4** TO **GROUND**. THE MOTOR RUNS TO ASCENT THE W NDOW. RELEASING THIS SW, THE ROTATION OF MOTOR IS STOPPED AND WINDOW CAN STOP AT WILL PLACE.

SWITCHING THE W NDOW LOCK SW IN "LOCK" POSITION, THE CIRCUIT IS OPENED AND STOPPED THE MOTOR ROTATION.

(FOR THE DOWN OPERATION, CURRENT FLOWS IN THE REVERSE D RECTION BECAUSE THE TERMINALS WHERE IT FLOWS ARE CHANGED).

R

SERVICE HINTS

P 2 POWER WINDOW CONTROL RELAY

3-GROUND: ALWAYS CONTINUITY

2-GROUND: APPROX. **12** VOLTS WITH THE IGNITION SW AT **ON** POSITION

5-GROUND: APPROX. **12** VOLTS WITH THE IGNITION SW AT **ON** POSITION AND THE MASTER SW AT **UP** POSITION

8-GROUND: APPROX. **12** VOLTS WITH THE IGNITION SW AT **ON** POSITION AND THE MASTER SW AT **AUTO DOWN** POSITION

9-GROUND: APPROX. **12** VOLTS WITH THE IGNITION SW AT **ON** POSITION AND THE MASTER SW AT **DOWN** OR **AUTO DOWN** POSITION

P 4 POWER WINDOW MASTER SW

4-GROUND: ALWAYS CONTINUITY

3-GROUND: APPROX. **12** VOLTS WITH THE IGNITION SW AT **ON** POSITION

WINDOW LOCK SW

OPEN WITH THE WINDOW LOCK SW AT **LOCK** POSITION

S

: PARTS LOCATION

CODE	SEE PAGE	CODE	SEE PAGE	CODE	SEE PAGE
P 2	21	**P 4**	21	**P 6**	21
P 3	21	**P 5**	21		

T

: RELAY BLOCKS

CODE	SEE PAGE	RELAY BLOCK (RELAY BLOCK LOCATION)
1	16	R/B NO. 1 (NSTRUMENT PANEL LEFT)

U

: JUNCTION BLOCK AND WIRE HARNESS CONNECTOR

CODE	SEE PAGE	JUNCTION BLOCK AND W RE HARNESS (CONNECTOR LOCATION)
3B	14	J/B NO. 3 AND COWL WIRE (INSTRUMENT PANEL LEFT S DE)

V

: CONNECTOR JOINING WIRE HARNESS AND WIRE HARNESS

CODE	SEE PAGE	JOINING WIRE HARNESS AND WIRE HARNESS (CONNECTOR LOCATION)
ID1	26	FRONT DOOR RH W RE AND COWL WIRE (RIGHT KICK PANEL)
IH1	26	FRONT DOOR LH W RE AND COWL WIRE (LEFT KICK PANEL)

W

: GROUND POINTS

CODE	SEE PAGE	GROUND POINT LOCATION
IC	24	COWL LEFT

X

: SPLICE POINTS

CODE	SEE PAGE	WIRE HARNESS WITH SPLICE POINTS	CODE	SEE PAGE	W RE HARNESS WITH SPLICE PO NTS
I 5	24	COWL WIRE			

Brought to you by BirfMark

Ⓠ : Explains the system outline.

Ⓡ : Indicates values or explains the function for reference during troubleshooting.

Ⓢ : Indicates the reference page showing the position on the vehicle of the parts in the system circuit.

Example: Part “P 4” (Power Window Master SW) is on page 21 of the manual.

* The letter in the code is from the first letter of the part, and the number indicates its order in parts starting with the letter.

Example: P 4

Part is 4th in order

Power Window Master SW

Ⓣ : Indicates the reference page showing the position on the vehicle of Relay Block Connectors in the system circuit.

Example: Connector “1” is described on page 16 of this manual and is installed on the left side of the instrument panel.

Ⓤ : Indicates the reference page showing the position on the vehicle of J/B and Wire Harness in the system circuit.

Example: Connector “3B”connects the Cowl Wire and J/B No. 3. It is described on page 14 of this manual, and is installed on the instrument panel left side.

Ⓥ : Indicates the reference page describing the wiring harness and wiring harness connector (the female wiring harness is shown first, followed by the male wiring harness).

Example: Connector “ID1”connects the front door RH wire (female) and cowl wire (male). It is described on page 26 of this manual, and is installed on the right side kick panel.

Ⓦ : Indicates the reference page showing the position of the ground points on the vehicle.

Example: Ground point “IC” is described on page 24 of this manual and is installed on the cowl left side.

Ⓧ : Indicates the reference page showing the position of the splice points on the vehicle.

Example: Splice point “I 5” is on the Cowl Wire Harness and is described on page 24 of this manual.

HINT:

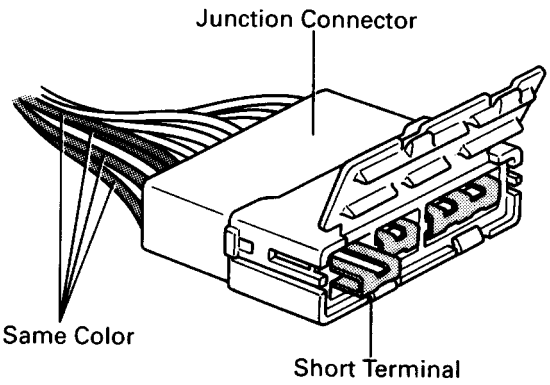

Junction connector (code: J1, J2, J3, J4, J5, J6, J7, J8, J9) in this manual include a short terminal which is connected to a number of wire harnesses. Always perform inspection with the short terminal installed. (When installing the wire harnesses, the harnesses can be connected to any position within the short terminal grouping. Accordingly, in other vehicles, the same position in the short terminal may be connected to a wire harness from a different part.)

Wire harness sharing the same short terminal grouping have the same color.

Brought to you by BirfMark

B HOW TO USE THIS MANUAL

The “Current Flow Chart” section, describes which parts each power source (fuses, fusible links, and circuit breakers) transmits current to. In the Power Source circuit diagram, the conditions when battery power is supplied to each system are explained. Since all System Circuit diagrams start from the power source, the power source system must be fully understood.

H POWER SOURCE (Current Flow Chart)

The chart below shows the route by which current flows from the battery to each electrical source (Fusible Link, Circuit Breaker, Fuse, etc.) and other parts.

The next page and following pages show the parts to which each electrical source outputs current.

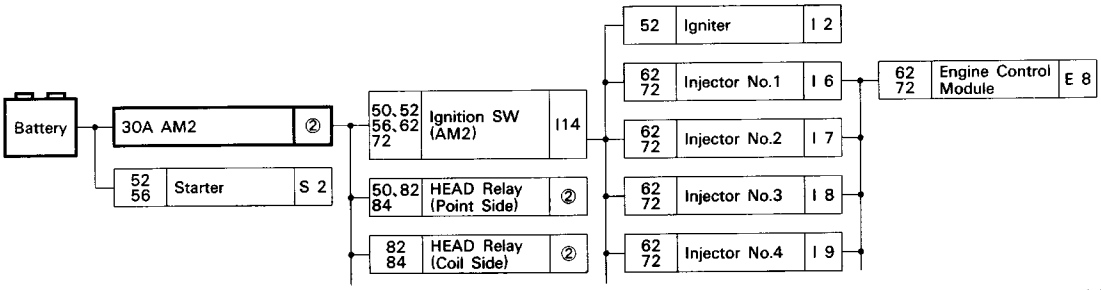

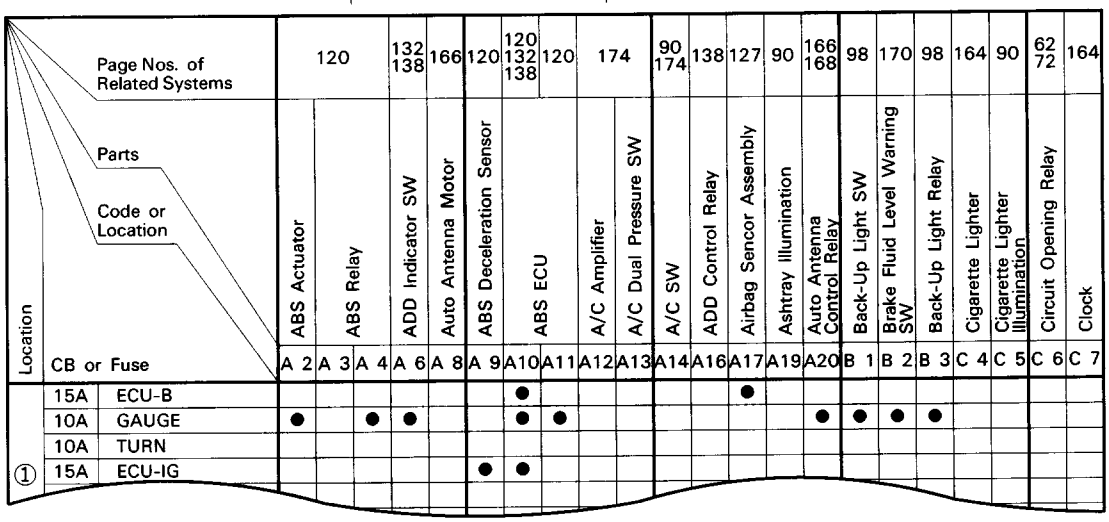

POWER SOURCE

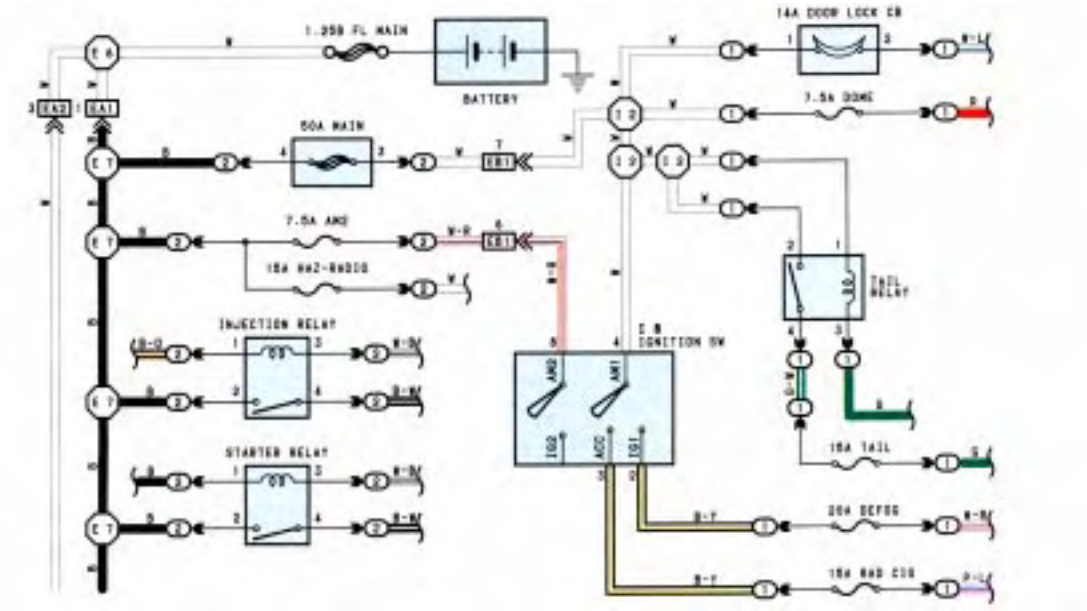

* The system shown here is an EXAMPLE ONLY. It is different to the actual circuit shown in the SYSTEM CIRCUITS SECTION.

The ground points circuit diagram shows the connections from all major parts to the respective ground points. When troubleshooting a faulty ground point, checking the system circuits which use a common ground may help you identify the problem ground quickly. The relationship between ground points (EA , IB , and IC shown below) can also be checked this way.

J GROUND POINT

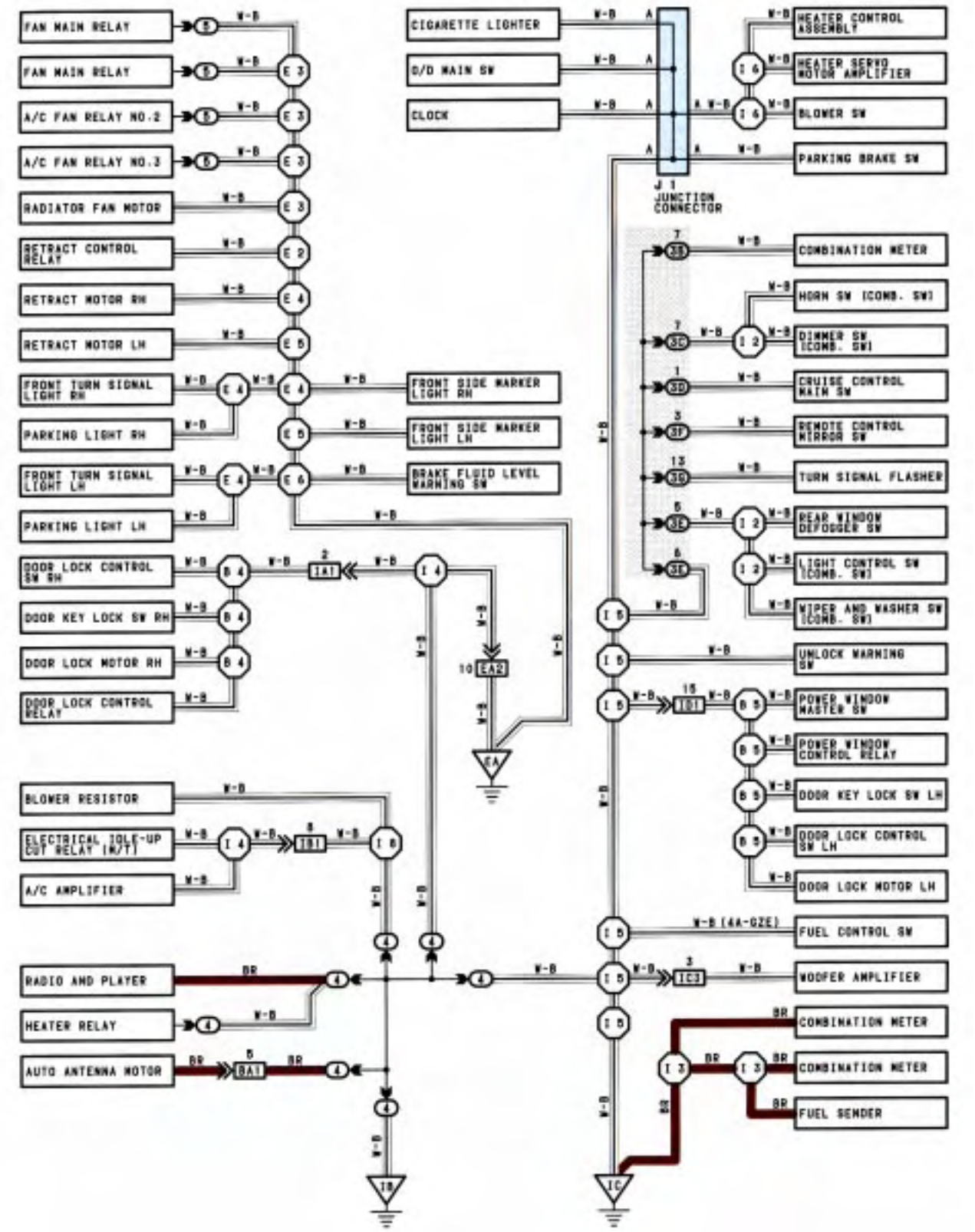

* The system shown here is an EXAMPLE ONLY. It is different to the actual circuit shown in the SYSTEM CIRCUITS SECTION.

Brought to you by BirfMark

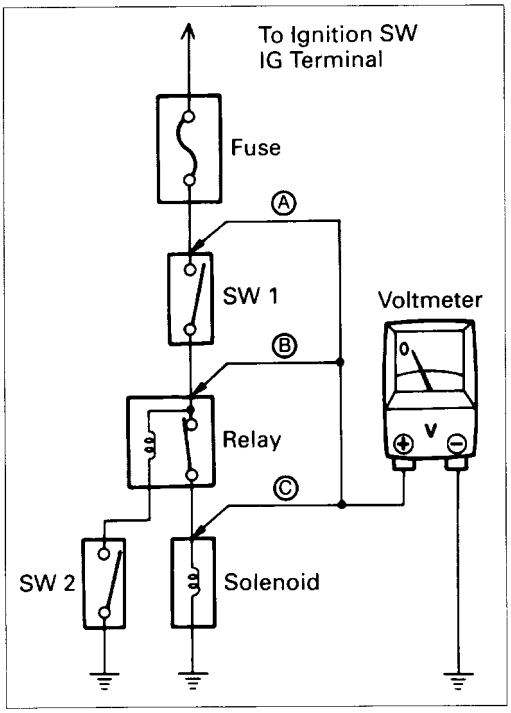

VOLTAGE CHECK

(a) Establish conditions in which voltage is present at the check point.

Example:

Ⓐ - Ignition SW on

Ⓑ - Ignition SW and SW 1 on

Ⓒ - Ignition SW, SW 1 and Relay on (SW2 off)

(b) Using a voltmeter, connect the negative lead to a good ground point or negative battery terminal, and the positive lead to the connector or component terminal. This check can be done with a test light instead of a voltmeter.

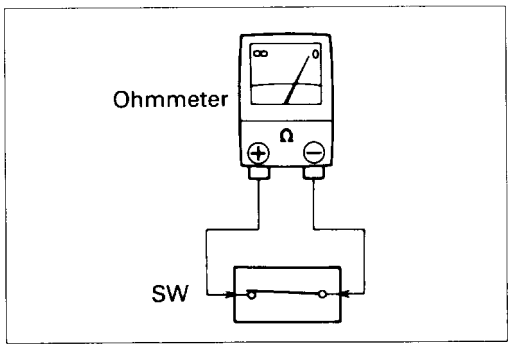

CONTINUITY AND RESISTANCE CHECK

(a) Disconnect the battery terminal or wire so there is no voltage between the check points.

(b) Contact the two leads of an ohmmeter to each of the check points.

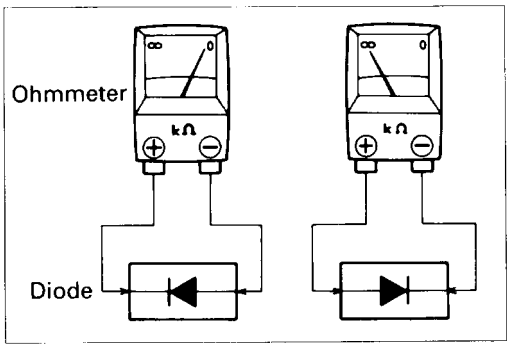

If the circuit has diodes, reverse the two leads and check again.

When contacting the negative lead to the diode positive side and the positive lead to the negative side, there should be continuity.

When contacting the two leads in reverse, there should be no continuity.

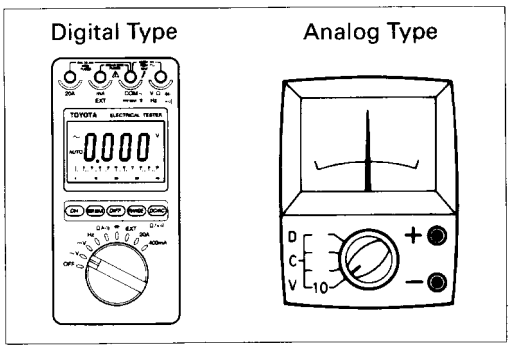

(c) Use the volt/ohmmeter with high impedance (10 kΩ/V minimum) for troubleshooting of the electrical circuit.

Brought to you by BirfMark

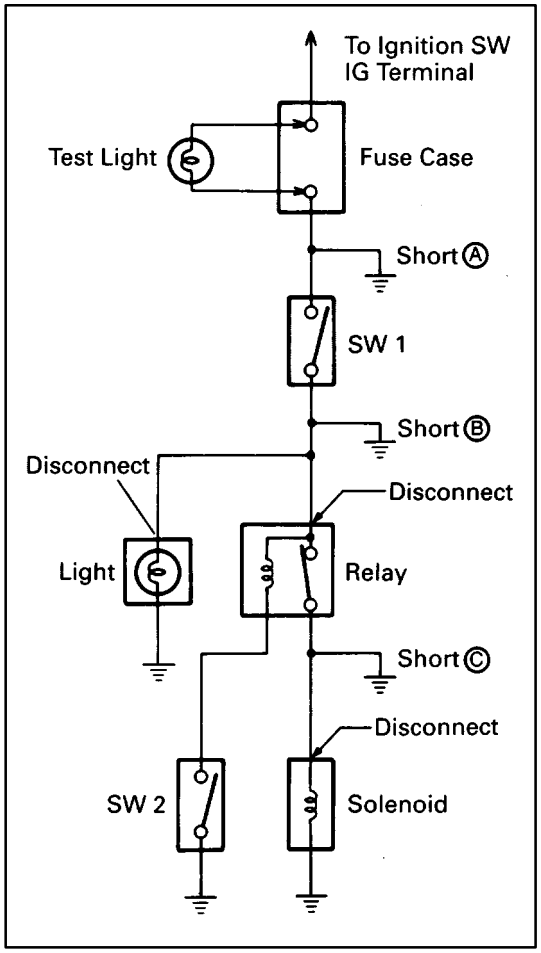

FINDING A SHORT CIRCUIT

(a) Remove the blown fuse and disconnect all loads of the fuse.

(b) Connect a test light in place of the fuse.

(c) Establish conditions in which the test light comes on.

Example:

Ⓐ - Ignition SW on

Ⓑ - Ignition SW and SW 1 on

Ⓒ - Ignition SW, SW 1 and Relay on (Connect the Relay) and SW 2 off (or Disconnect SW 2)

(d) Disconnect and reconnect the connectors while watching the test light.

The short lies between the connector where the test light stays lit and the connector where the light goes out.

(e) Find the exact location of the short by lightly shaking the problem wire along the body.

CAUTION:

(a) Do not open the cover or the case of the ECU unless absolutely necessary. (If the IC terminals are touched, the IC may be destroyed by static electricity.)

(b) When replacing the internal mechanism (ECU part) of the digital meter, be careful that no part of your body or clothing comes in contact with the terminals of leads from the IC, etc. of the replacement part (spare part).

DISCONNECTION OF MALE AND FEMALE CONNECTORS

To pull apart the connectors, pull on the connector itself, not the wire harness.

HINT: Check to see what kind of connector you are disconnecting before pulling apart.

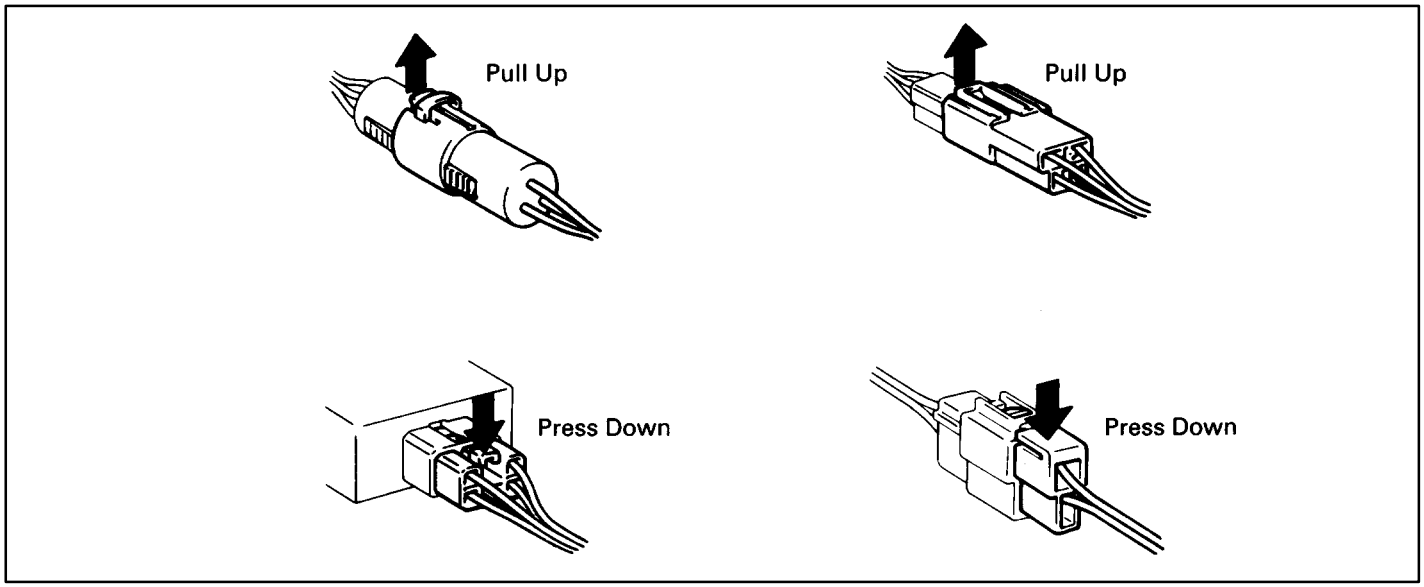

Brought to you by BirfMark

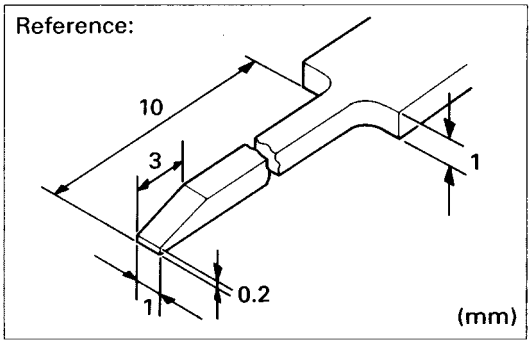

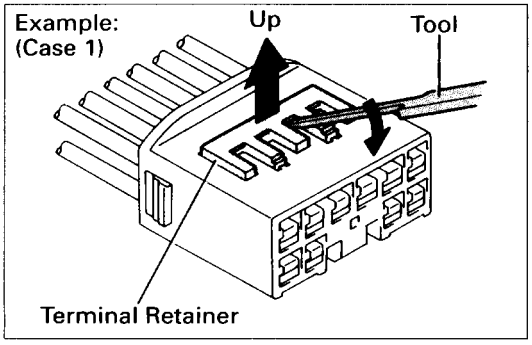

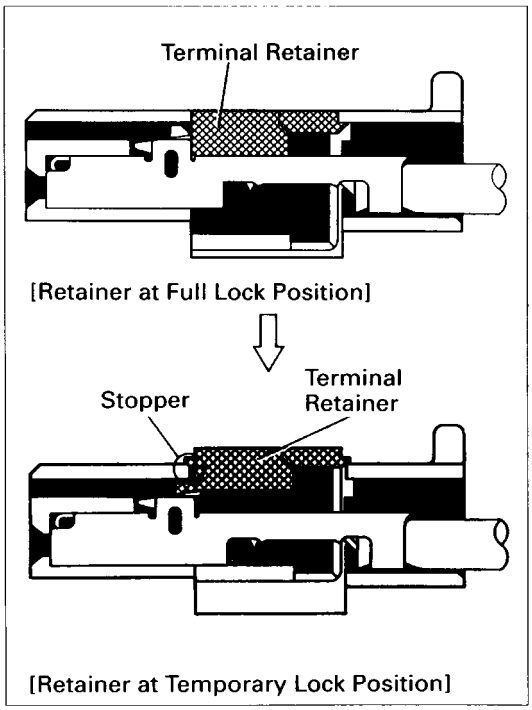

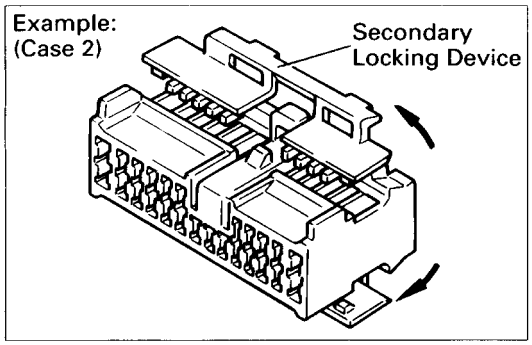

HOW TO REPLACE TERMINAL

(with terminal retainer or secondary locking device)

1. PREPARE THE SPECIAL TOOL

   HINT: To remove the terminal from the connector, please construct and use the special tool or like object shown on the left.

2. DISCONNECT CONNECTOR

3. DISENGAGE THE SECONDARY LOCKING DEVICE OR TERMINAL RETAINER

   (a) Locking device must be disengaged before the terminal locking clip can be released and the terminal removed from the connector.

   (b) Use a special tool or the terminal pick to unlock the secondary locking device or terminal retainer.

NOTICE:

Do not remove the terminal retainer from connector body.

Ⓐ For Non-Waterproof Type Connector

HINT: The needle insertion position varies according to the connector's shape (number of terminals etc.), so check the position before inserting it.

"Case 1"

Raise the terminal retainer up to the temporary lock position.

"Case 2"

Open the secondary locking device.

Brought to you by BirfMark

Brought to you by BirfMark

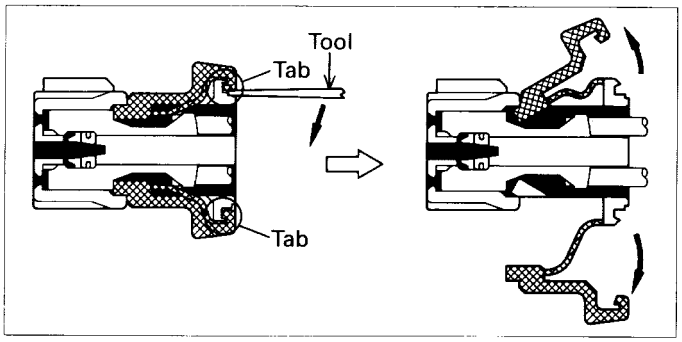

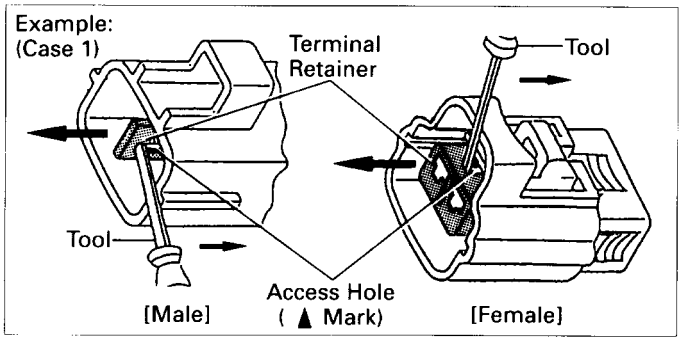

Ⓑ For Waterproof Type Connector

HINT: Terminal retainer color is different according to connector body.

Example:

Terminal Retainer	Connector Body
Black or White	: Gray
Black or White	: Dark Gray
Gray or White	: Black

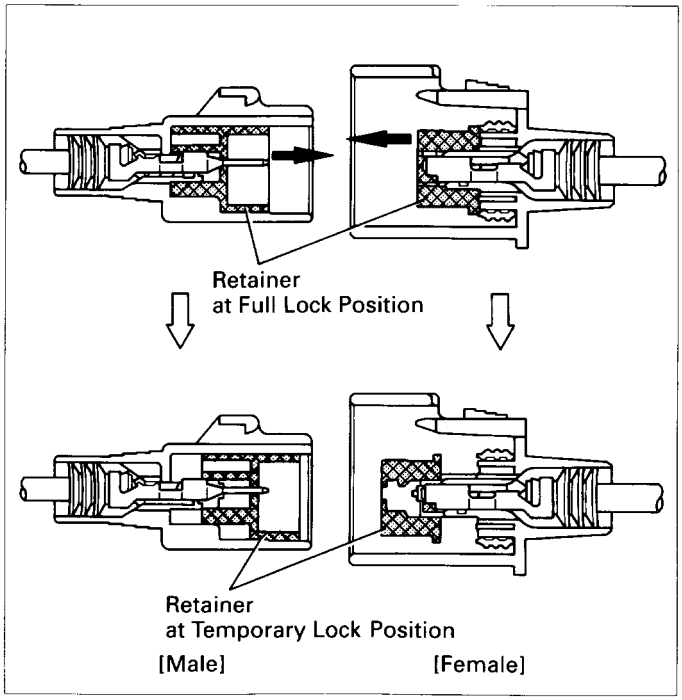

"Case 1"

Type where terminal retainer is pulled up to the temporary lock position (Pull Type).

Insert the special tool into the terminal retainer access hole (▲ Mark) and pull the terminal retainer up to the temporary lock position.

HINT: The needle insertion position varies according to the connector's shape (number of terminals, etc.), so check the position before inserting it.

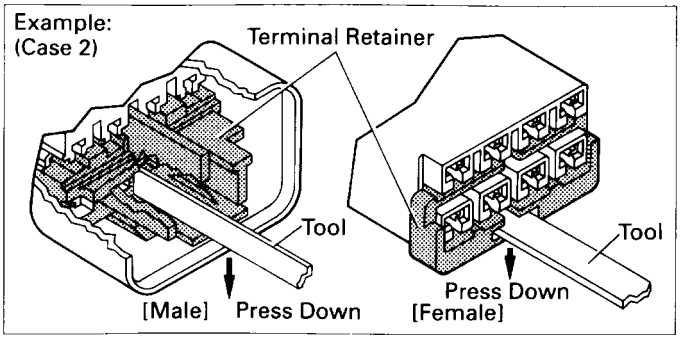

"Case 2"

Type which cannot be pulled as far as Power Lock insert the tool straight into the access hole of terminal retainer as shown.

Brought to you by BirfMark

Brought to you by BirfMark

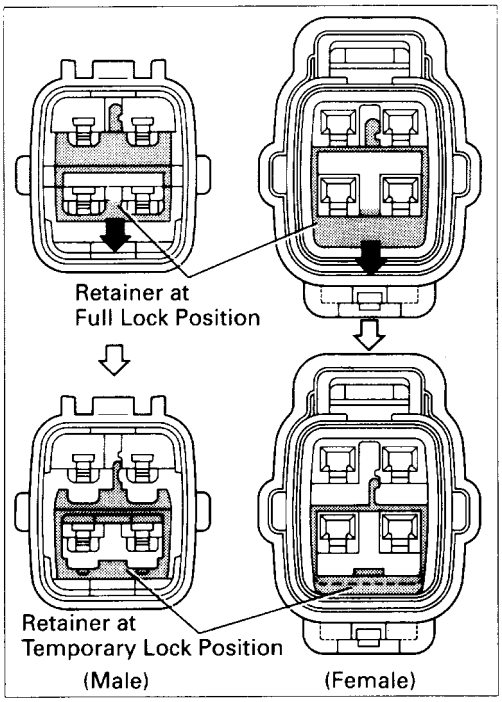

Push the terminal retainer down to the temporary lock position.

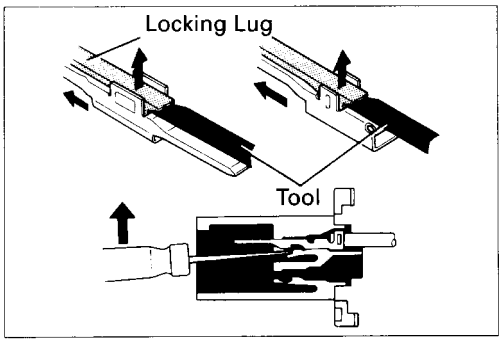

(c) Release the locking lug from terminal and pull the terminal out from rear.

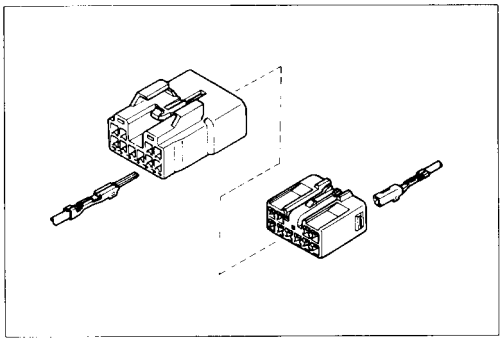

4. INSTALL TERMINAL TO CONNECTOR

(a) Insert the terminal.

HINT:

1. Make sure the terminal is positioned correctly.
2. Insert the terminal until the locking lug locks firmly.
3. Insert the terminal with terminal retainer in the temporary lock position.

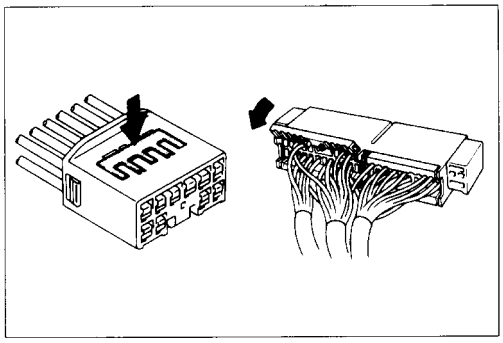

(b) Push the secondary locking device or terminal retainer into the full lock position.

5. CONNECT CONNECTOR

Brought to you by BirfMark

Brought to you by BirfMark

ABBREVIATIONS

The following abbreviations are used in this manual.

ABS	=	Anti-Lock Brake System
A/C	=	Air Conditioning
A/T	=	Automatic Transmission
CD	=	Compact Disc
COMB.	=	Combination
DIFF.	=	Differential
ECU	=	Electronic Control Unit
EGR	=	Exhaust Gas Recirculation
ESA	=	Electronic Spark Advance
FL	=	Fusible Link
LH	=	Left-Hand
O/D	=	Overdrive
R/B	=	Relay Block
RH	=	Right-Hand
SFI	=	Sequential Multiport Fuel Injection
SRS	=	Supplemental Restraint System
SW	=	Switch
TEMP.	=	Temperature
VSV	=	Vacuum Switching Valve
W/	=	With
W/O	=	Without

* The titles given inside the components are the names of the terminals (terminal codes) and are not treated as being abbreviations.

Brought to you by BirfMark

E GLOSSARY OF TERMS AND SYMBOLS

BATTERY

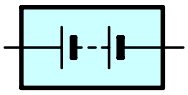

Stores chemical energy and converts it into electrical energy. Provides DC current for the auto's various electrical circuits.

CAPACITOR (Condenser)

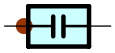

A small holding unit for temporary storage of electrical voltage.

CIGARETTE LIGHTER

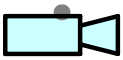

An electric resistance heating element.

CIRCUIT BREAKER

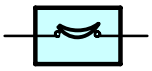

Basically a reusable fuse, a circuit breaker will heat and open if too much current flows through it. Some units automatically reset when cool, others must be manually reset.

DIODE

A semiconductor which allows current flow in only one direction.

DIODE, ZENER

A diode which allows current flow in one direction but blocks reverse flow only up to a specific voltage. Above that potential, it passes the excess voltage. This acts as a simple voltage regulator.

PHOTODIODE

The photodiode is a semiconductor which controls the current flow according to the amount of light.

DISTRIBUTOR, IIA

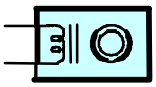

Channels high-voltage current from the ignition coil to the individual spark plugs.

FUSE

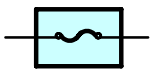

A thin metal strip which burns through when too much current flows through it, thereby stopping current flow and protecting a circuit from damage.

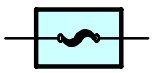

(for Medium Current Fuse)

FUSIBLE LINK

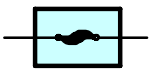

(for High Current Fuse or Fusible Link.)

A heavy-gauge wire placed in high amperage circuits which burns through on overloads, thereby protecting the circuit. The numbers indicate the cross-section surface area of the wires.

GROUND

The point at which wiring attaches to the Body, thereby providing a return path for an electrical circuit; without a ground, current cannot flow.

HEADLIGHTS

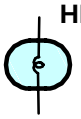

1. SINGLE FILAMENT

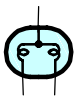

2. DOUBLE FILAMENT

Current flow causes a headlight filament to heat up and emit light. A headlight may have either a single (1) filament or a double (2) filament.

HORN

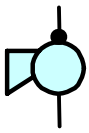

An electric device which sounds a loud audible signal.

IGNITION COIL

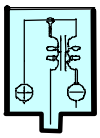

Convert low-voltage DC current into high-voltage ingition current for firing the spark plugs.

LIGHT

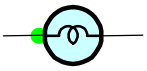

Current flow through a filament causes the filament to heat up and emit light.

LED (LIGHT EMITTING DIODE)

Upon current flow, these diodes emit light without producing the heat of a comparable light.

METER, ANALOG

Current flow activates a magnetic coil which causes a needle to move, thereby providing a relative display against a background calibration.

METER, DIGITAL

Current flow activates one or many LED's, LCD's, or fluorescent displays, which provide a relative or digital display.

MOTOR

A power unit which converts electrical energy into mechanical energy, especially rotary motion.

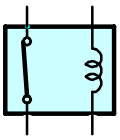

RELAY

1. NORMALLY CLOSED

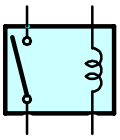

2. NORMALLY OPEN

Basically, an electrically operated switch which may be normally closed (1) or open (2).

Current flow through a small coil creates a magnetic field which either opens or closes an attached switch.

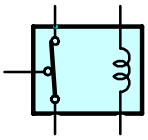

RELAY, DOUBLE THROW

A relay which passes current through one set of contacts or the other.

RESISTOR

An electrical component with a fixed resistance, placed in a circuit to reduce voltage to a specific value.

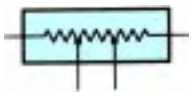

RESISTOR, TAPPED

A resistor which supplies two or more different non adjustable resistance values.

RESISTOR, VARIABLE OR RHEOSTAT

A controllable resistor with a variable rate of resistance. Also called a potentiometer or rheostat.

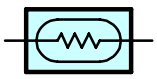

SENSOR (Thermistor)

A resistor which varies its resistance with temperature.

SENSOR, SPEED

Uses magnetic impulses to open and close a switch to create a signal for activation of other components.

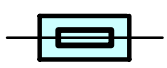

SHORT PIN

Used to provide an unbroken connection within a juction block.

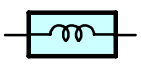

SOLENOID

An electromagnetic coil which forms a magnetic field when current flows, to move a plunger, etc.

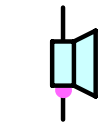

SPEAKER

An electromechanical device which creates sound waves from current flow.

SWITCH, MANUAL

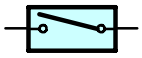

1. NORMALLY OPEN

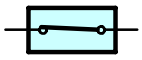

2. NORMALLY CLOSED

Opens and closes circuits, thereby stopping (1) or allowing (2) current flow.

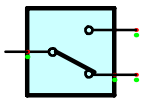

SWITCH, DOUBLE THROW

A switch which continuously passes current through one set of contacts or the other.

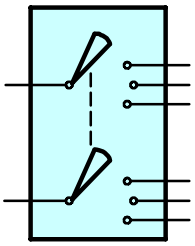

SWITCH, IGNITION

A key operated switch with several positions which allows various circuits, particularly the primary ignition circuit, to become operational.

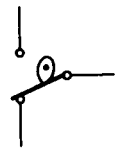

SWITCH, WIPER PARK

Automatically returns wipers to the stop position when the wiper switch is turned off.

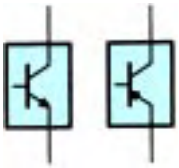

TRANSISTOR

A solid state device typically used as an electronic relay; stops or passes current depending on the voltage applied at “base.”

WIRES

(1) NOT CONNECTED

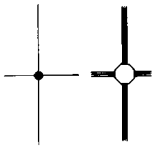

(2) SPLICED

Wires are always drawn as straight lines on wiring diagrams. Crossed wires (1) without a black dot at the junction are not joined; crossed wires (2) with a black dot or octagonal (⯃) mark at the juction as spliced (joined) connections.

F RELAY LOCATIONS

[Engine Compartment]

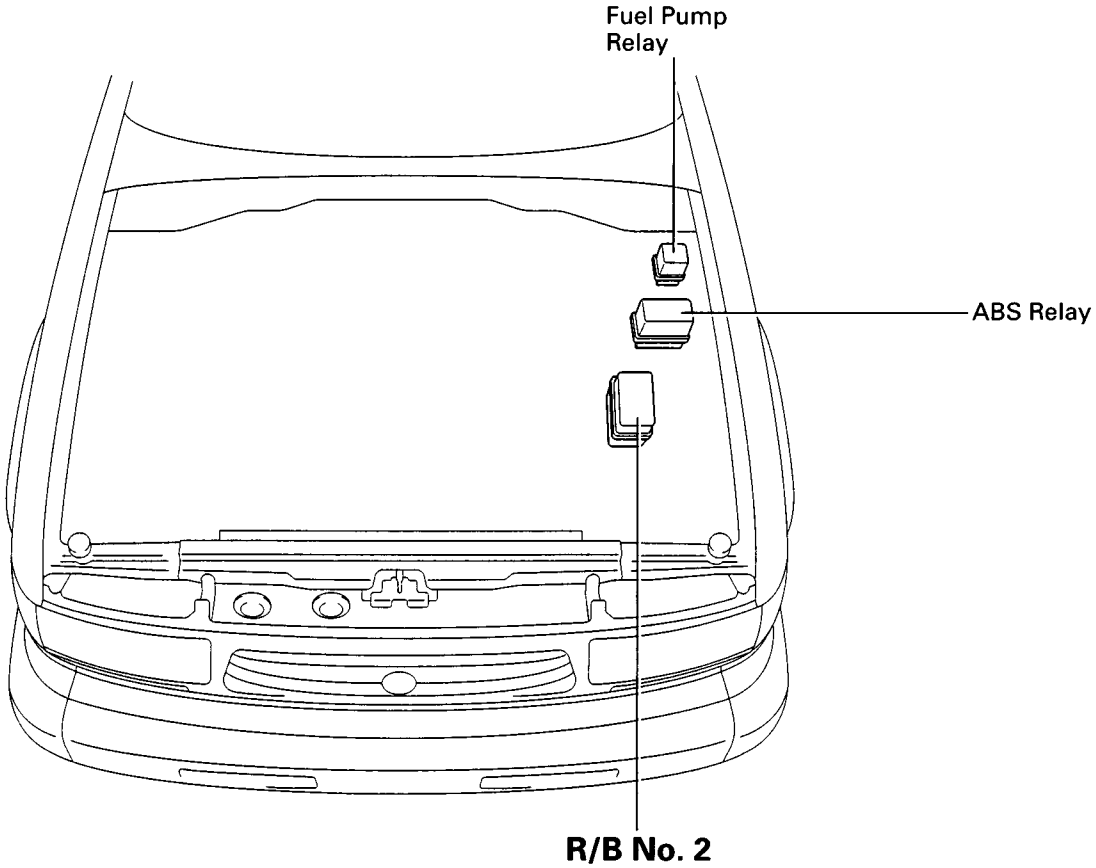

② : R/B No. 2	Front Side of Left Fender

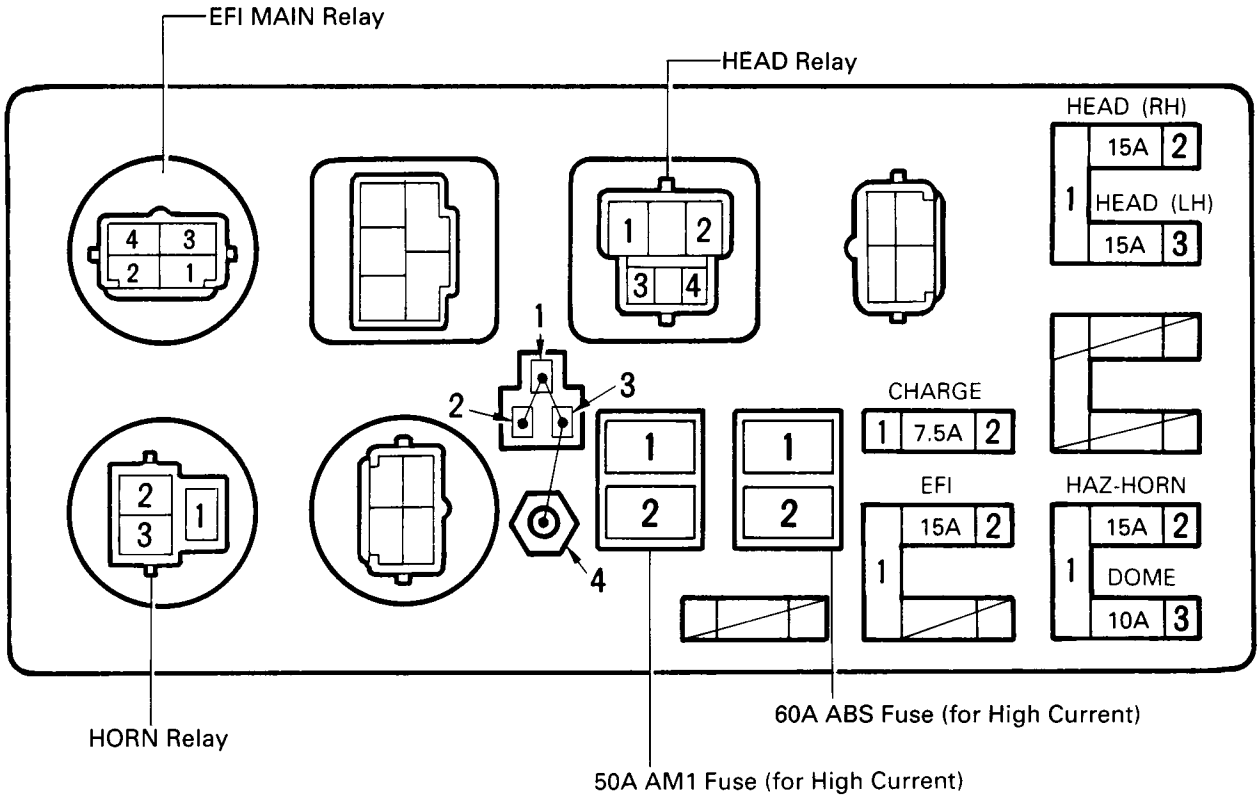

[Instrument Panel]

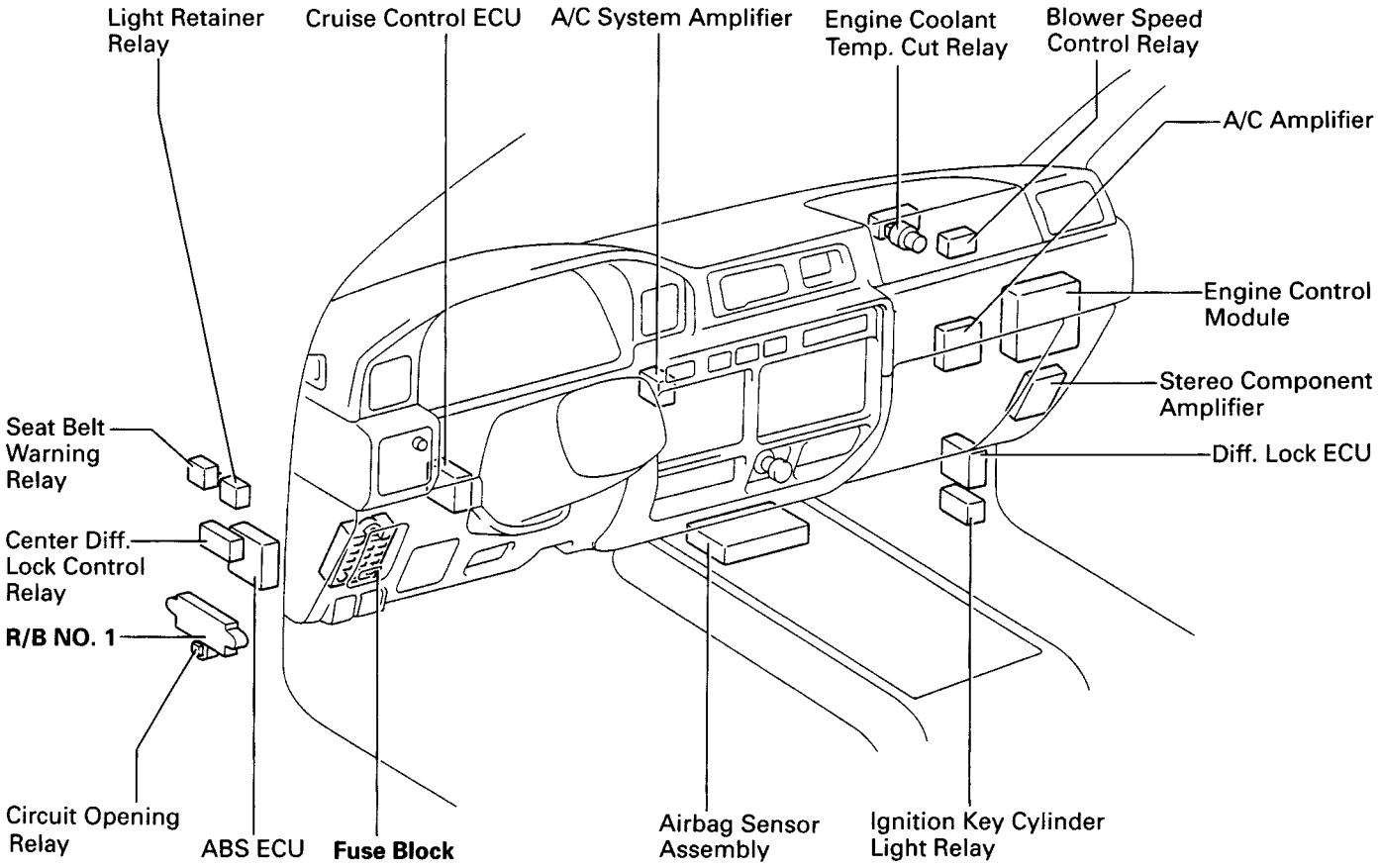

[Body]

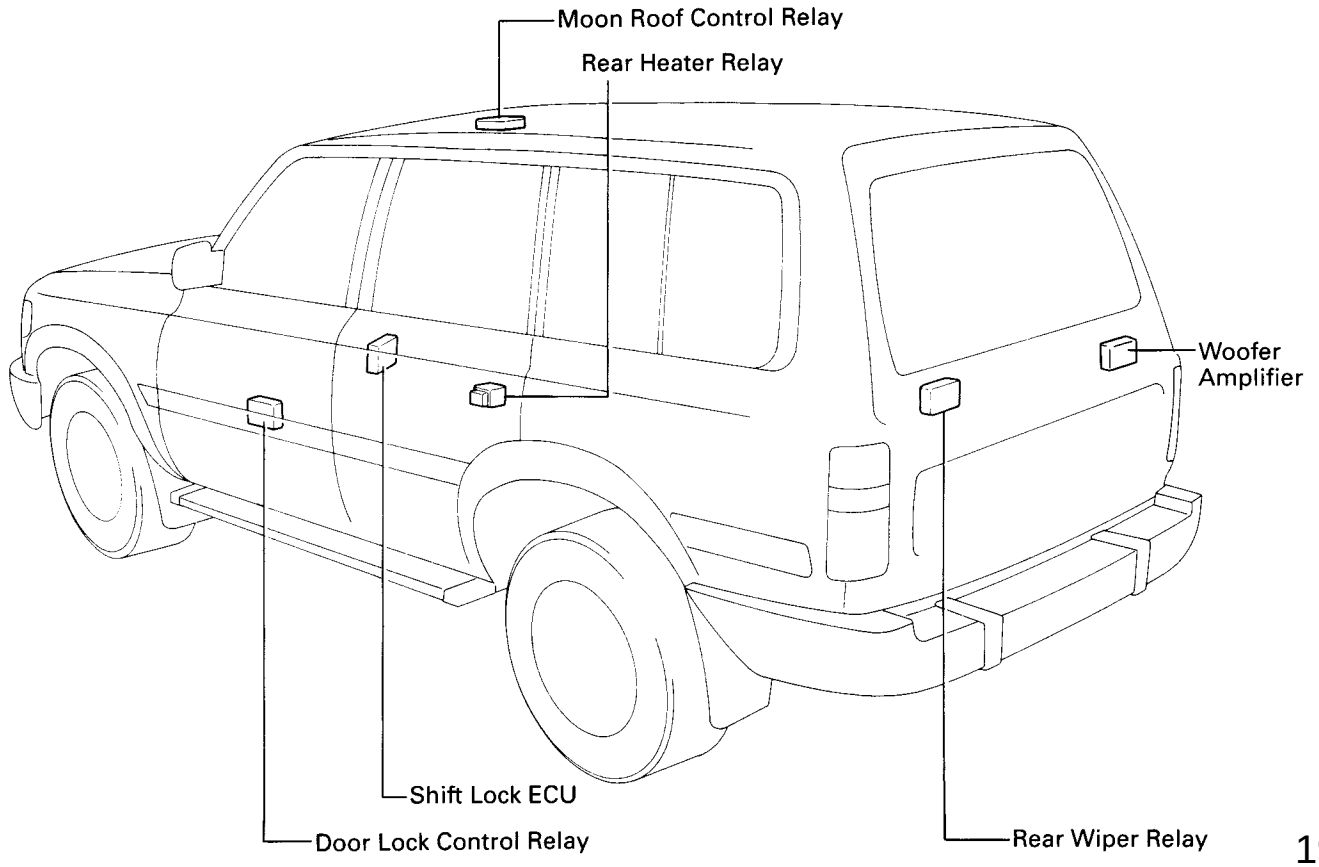

F RELAY LOCATIONS

① : R/B No. 1	Left Kick Panel (See Page 19)

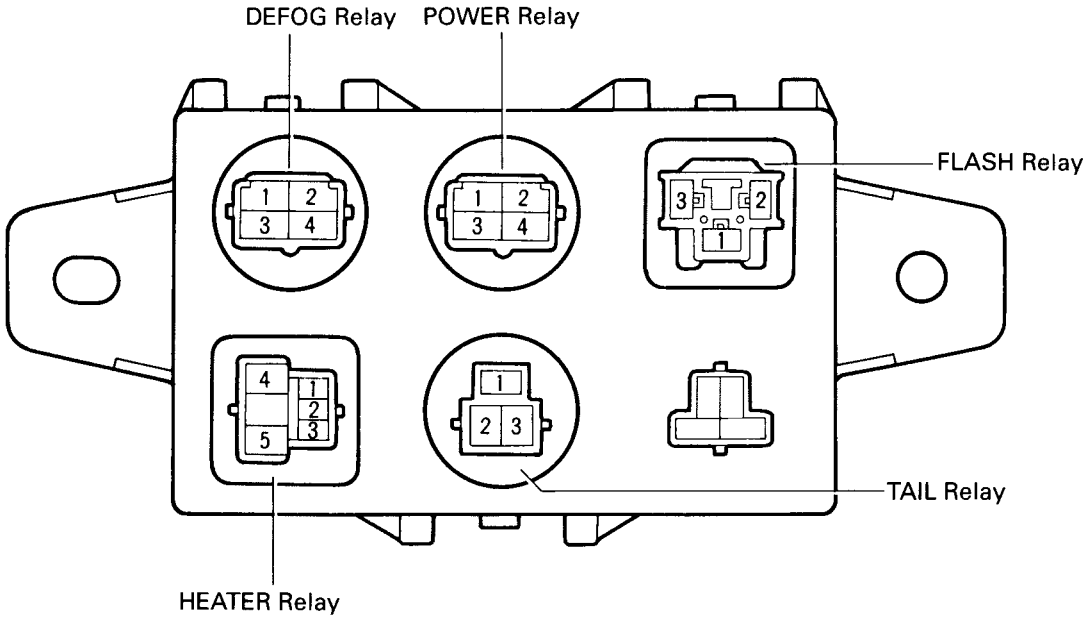

Fuse Block	Instrument Panel Left (See Page 19)

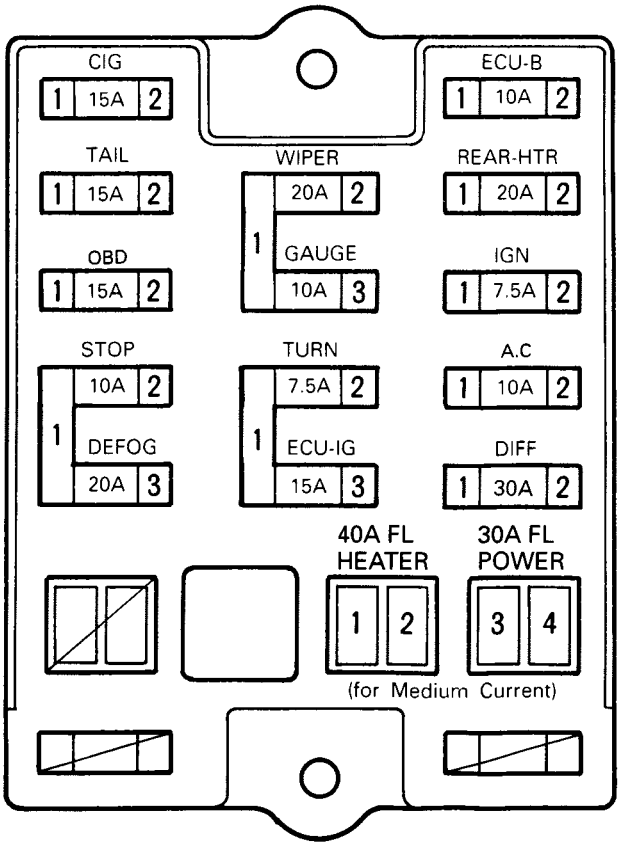

MEMO

G ELECTRICAL WIRING ROUTING

Position of Parts in Engine Compartment

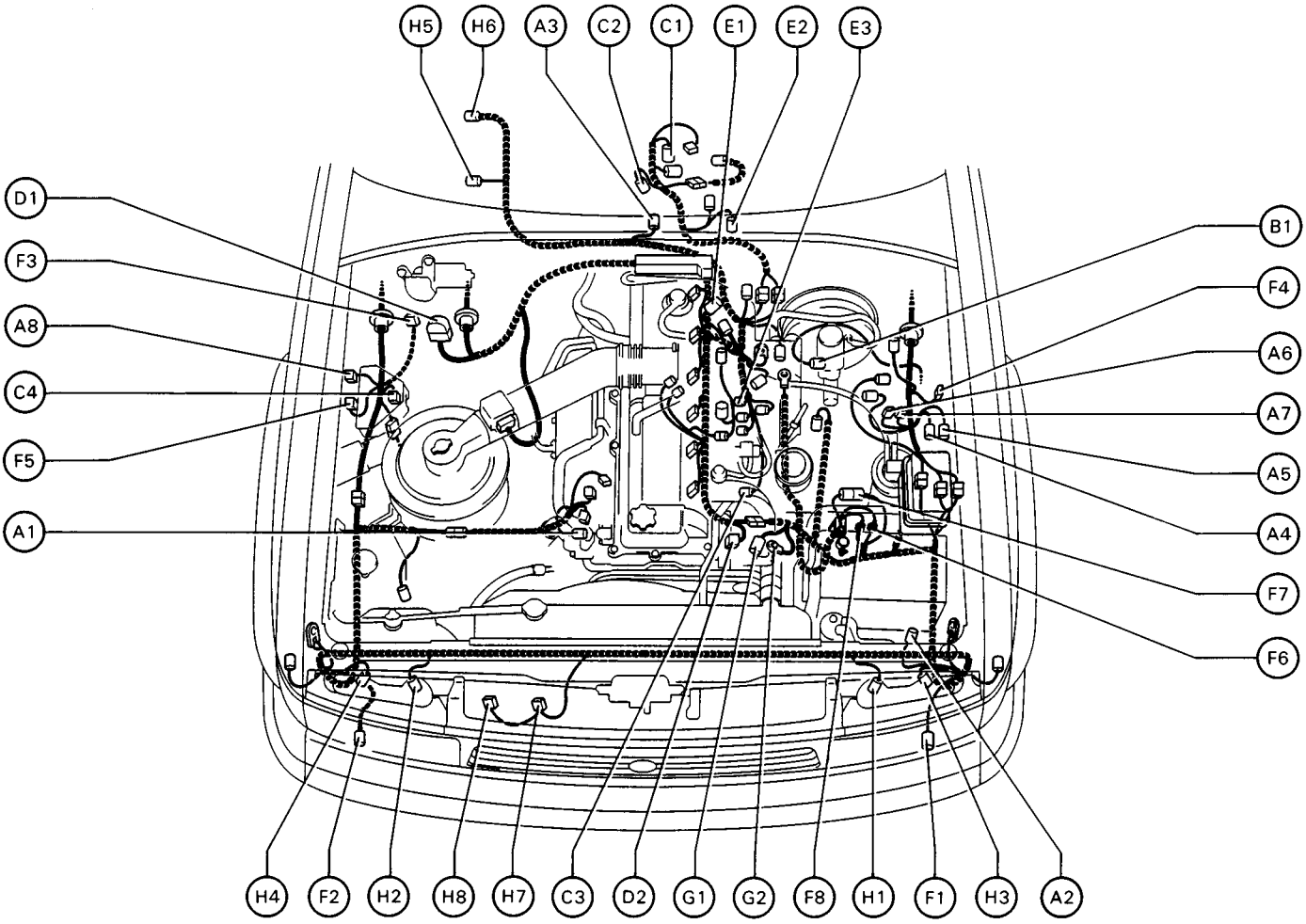

A 1 A/C Magnetic Clutch
A 2 A/C Dual Pressure SW
A 3 A/T Fluid Temp. Sensor
A 4 ABS Actuator
A 5 ABS Actuator
A 6 ABS Relay
A 7 ABS Relay
A 8 Auto Antenna Motor

B 1 Brake Fluid Level Warning SW

C 1 Center Diff. Lock Control Motor
C 2 Center Diff. Lock Indicator SW
C 3 Crankshaft Position Sensor
C 4 Cruise Control Actuator

D 1 Data Link Connector 1
D 2 Distributor

E 1 EGR Gas Temp. Sensor
E 2 Electronically Controlled Transmission Solenoid
E 3 Engine Coolant Temp. Sensor

F 1 Front Turn Signal Light LH
F 2 Front Turn Signal Light RH
F 3 Front Wiper Motor
F 4 Fuel Pump Relay
F 5 Fuel Pump Resistor
F 6 Fusible Link (AM1)
F 7 Fusible Link (AM2)
F 8 Fusible Link (Main)

G 1 Generator
G 2 Generator

H 1 Headlight Hi LH
H 2 Headlight Hi RH
H 3 Headlight Lo LH
H 4 Headlight Lo RH
H 5 Heated Oxygen Sensor (Bank 1 Sensor 1)
H 6 Heated Oxygen Sensor (Bank 1 Sensor 2)
H 7 Horn LH
H 8 Horn RH

Position of Parts in Engine Compartment

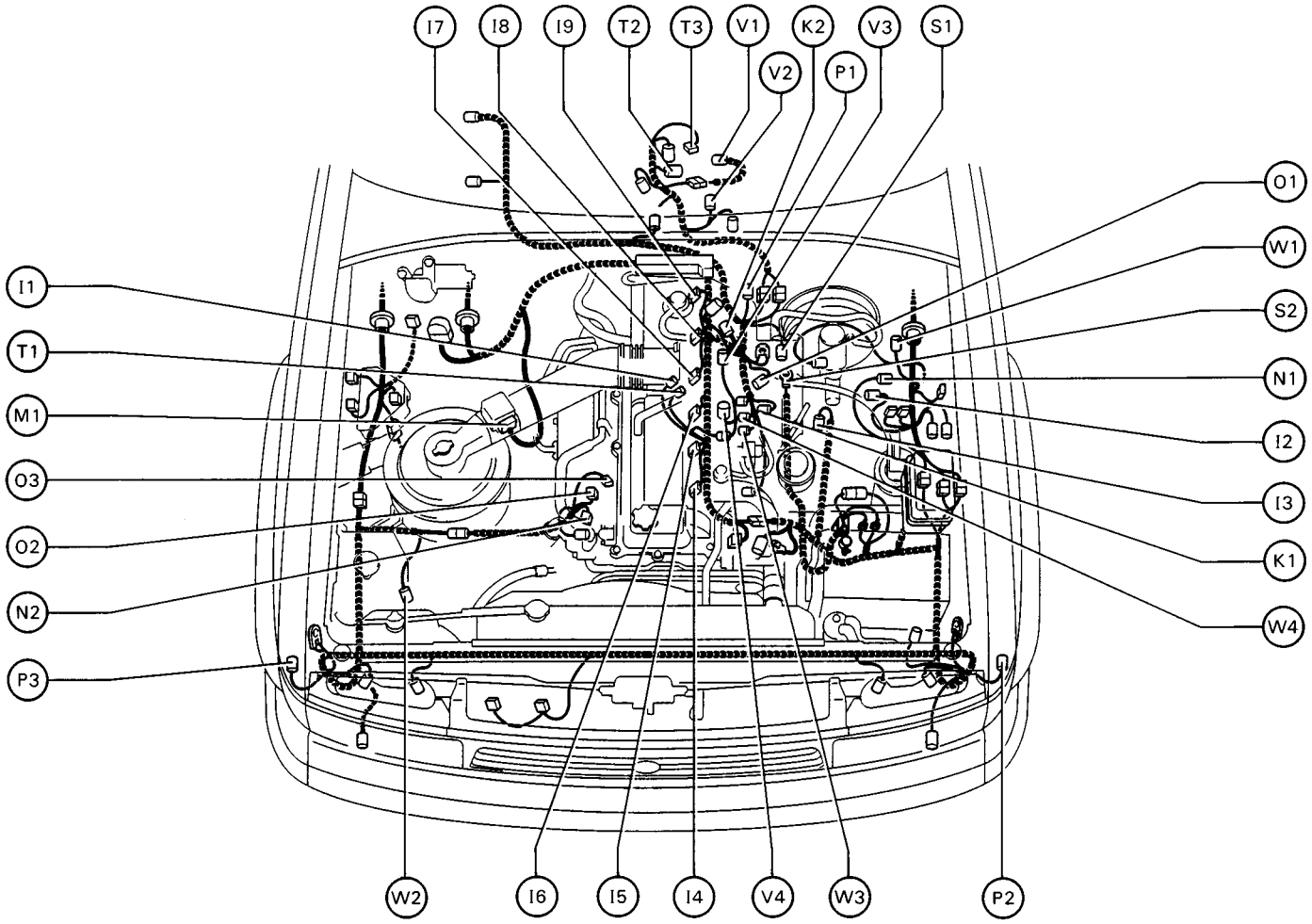

I 1 Idle Air Control Valve
I 2 Igniter
I 3 Ignition Coil
I 4 Injector No. 1
I 5 Injector No. 2
I 6 Injector No. 3
I 7 Injector No. 4
I 8 Injector No. 5
I 9 Injector No. 6

K 1 Knock Sensor 1
K 2 Knock Sensor 2

M 1 Mass Air Flow

N 1 Noise Filter (Ignition System)
N 2 Noise Filter (Oil Pressure Sender)

O 1 Oil Level Warning SW
O 2 Oil Pressure Sender
O 3 Oil Pressure Sender

P 1 Park/Neutral Position SW
P 2 Parking Light LH
P 3 Parking Light RH

S 1 Starter
S 2 Starter

T 1 Throttle Position Sensor
T 2 Transfer L4 Position SW
T 3 Transfer Neutral Position SW

V 1 Vehicle Speed Sensor (Combination Meter)
V 2 Vehicle Speed Sensor (Electronically Controlled Transmission)
V 3 VSV (EGR)
V 4 VSV (Fuel Pressure Control)

W 1 Washer Change Valve
W 2 Washer Motor
W 3 Water Temp. Sender
W 4 Water Temp. SW (A/C)

G ELECTRICAL WIRING ROUTING

Position of Parts in Instrument Panel

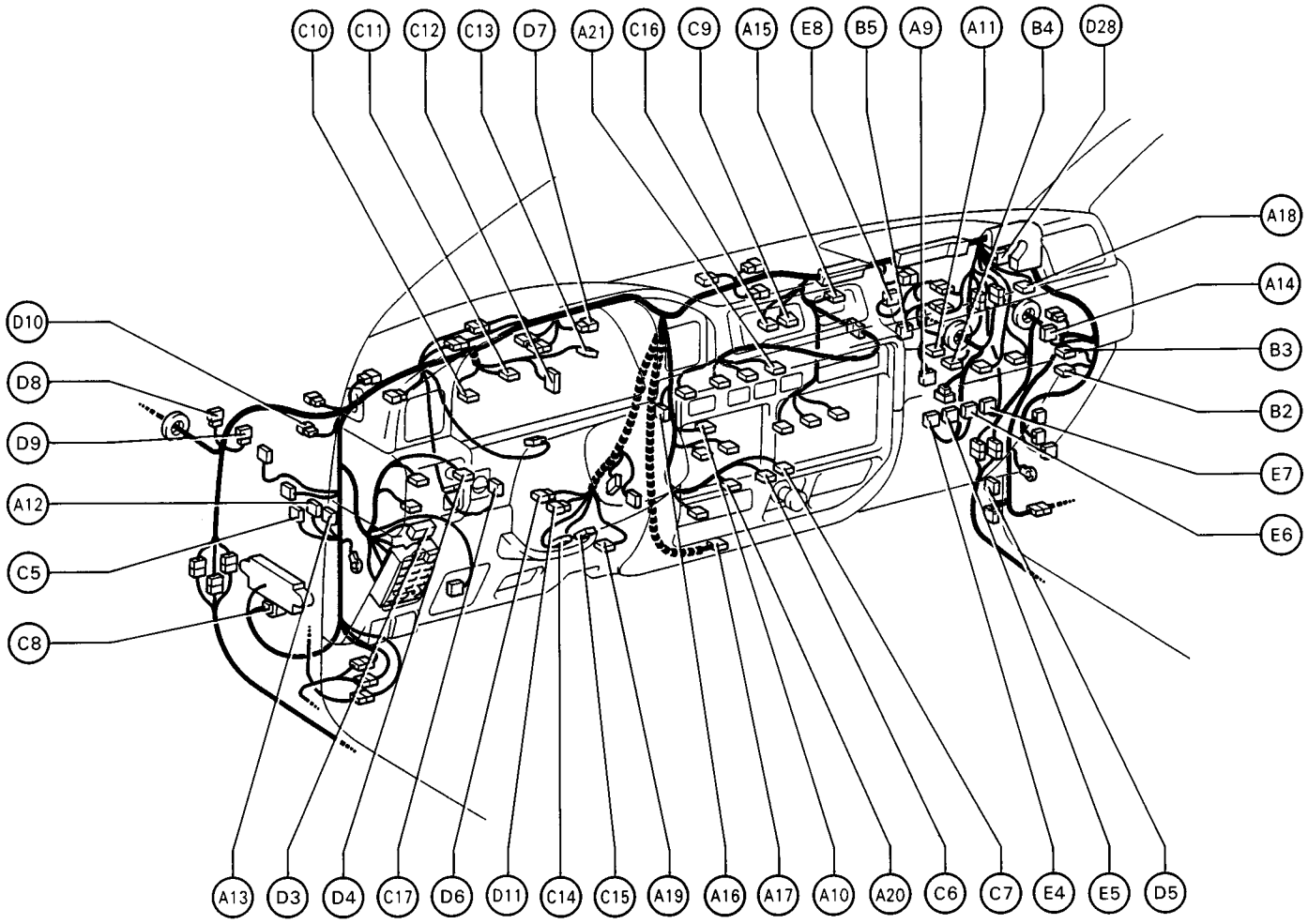

A 9 A/C Amplifier
A 10 A/C System Amplifier
A 11 A/C Thermistor
A 12 ABS ECU
A 13 ABS ECU
A 14 Air Inlet Control Servo Motor
A 15 Air Mix Control Servo Motor
A 16 Air Vent Mode Control Servo Motor
A 17 Airbag Sensor Assembly
A 18 Airbag Squib (Front Passenger's Airbag Assembly)
A 19 Airbag Squip (Steering Wheel Pad)
A 20 Ashtray Illumination
A 21 Auto Antenna Control SW

B 2 Blower Motor (A/C)
B 3 Blower Motor (Heater)
B 4 Blower Resistor
B 5 Blower Speed Control Relay

C 5 Center Diff. Lock Control Relay
C 6 Cigarette Lighter
C 7 Cigarette Lighter Illumination
C 8 Circuit Opening Relay
C 9 Clock
C 10 Combination Meter
C 11 Combination Meter
C 12 Combination Meter
C 13 Combination Meter
C 14 Combination SW
C 15 Combination SW
C 16 Cooling Fan (Radio and Player)
C 17 Cruise Control ECU

D 3 Data Link Connector 3
D 4 Diff. Lock Control SW
D 5 Diff. Lock ECU
D 6 Diode (Front Washer)
D 7 Diode (Headlight)
D 8 Diode (Interior Light)
D 9 Diode (Interior Light)
D 10 Diode (Interior Light)
D 11 Diode (Rear Washer)
D 28 Diode (Neutral Detection)

E 4 Engine Control Module
E 5 Engine Control Module
E 6 Engine Control Module
E 7 Engine Control Module
E 8 Engine Control Temp. Cut Relay

Position of Parts in Instrument Panel

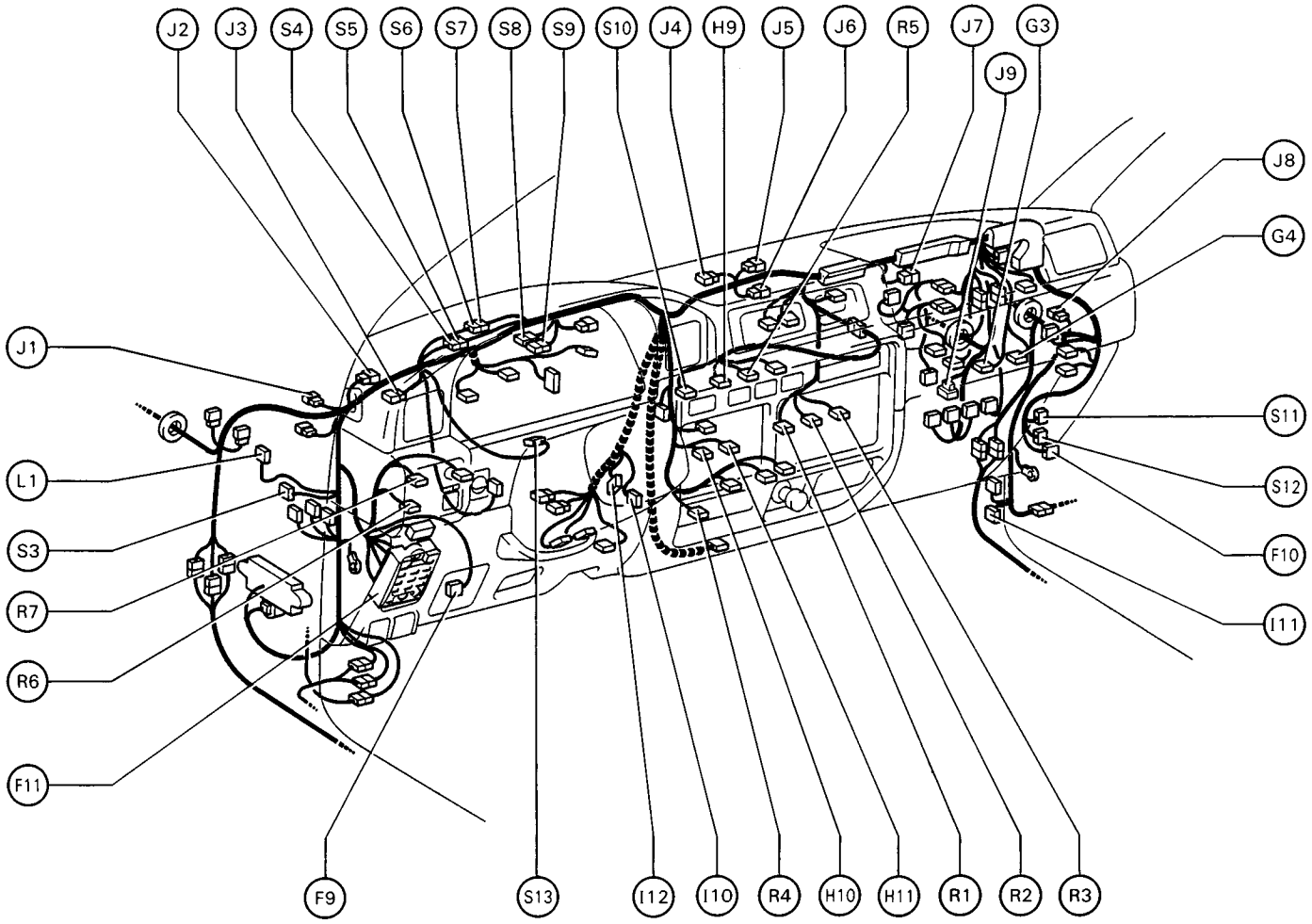

F 9 Front Speaker LH
F 10 Front Speaker RH
F 11 Fuse Block

G 3 Glove Box Light
G 4 Glove Box Light SW

H 9 Hazard SW
H 10 Heater Control SW and A/C SW
H 11 Heater Control SW and A/C SW

I 10 Ignition Key Cylinder Light
I 11 Ignition Key Cylinder Light Relay
I 12 Ignition SW, Unlock Warning SW and Key Interlock Solenoid

J 1 Junction Connector
J 2 Junction Connector
J 3 Junction Connector
J 4 Junction Connector
J 5 Junction Connector
J 6 Junction Connector
J 7 Junction Connector
J 8 Junction Connector
J 9 Junction Connector

L 1 Light Retainer Relay

R 1 Radio and Player
R 2 Radio and Player
R 3 Radio and Player
R 4 Rear Heater SW
R 5 Rear Window Defogger SW
R 6 Remote Control Mirror SW
R 7 Rheostat

S 3 Seat Belt Warning Relay
S 4 Short Connector (SRS)
S 5 Short Connector (SRS)
S 6 Short Connector (SRS)
S 7 Short Connector (SRS)
S 8 Short Connector (A/C)
S 9 Short Connector (A/C)
S 10 Short Pin (Center Diff. Lock)
S 11 Stereo Component Amplifier
S 12 Stereo Component Amplifier
S 13 Stop Light SW

G ELECTRICAL WIRING ROUTING

Position of Parts in Body

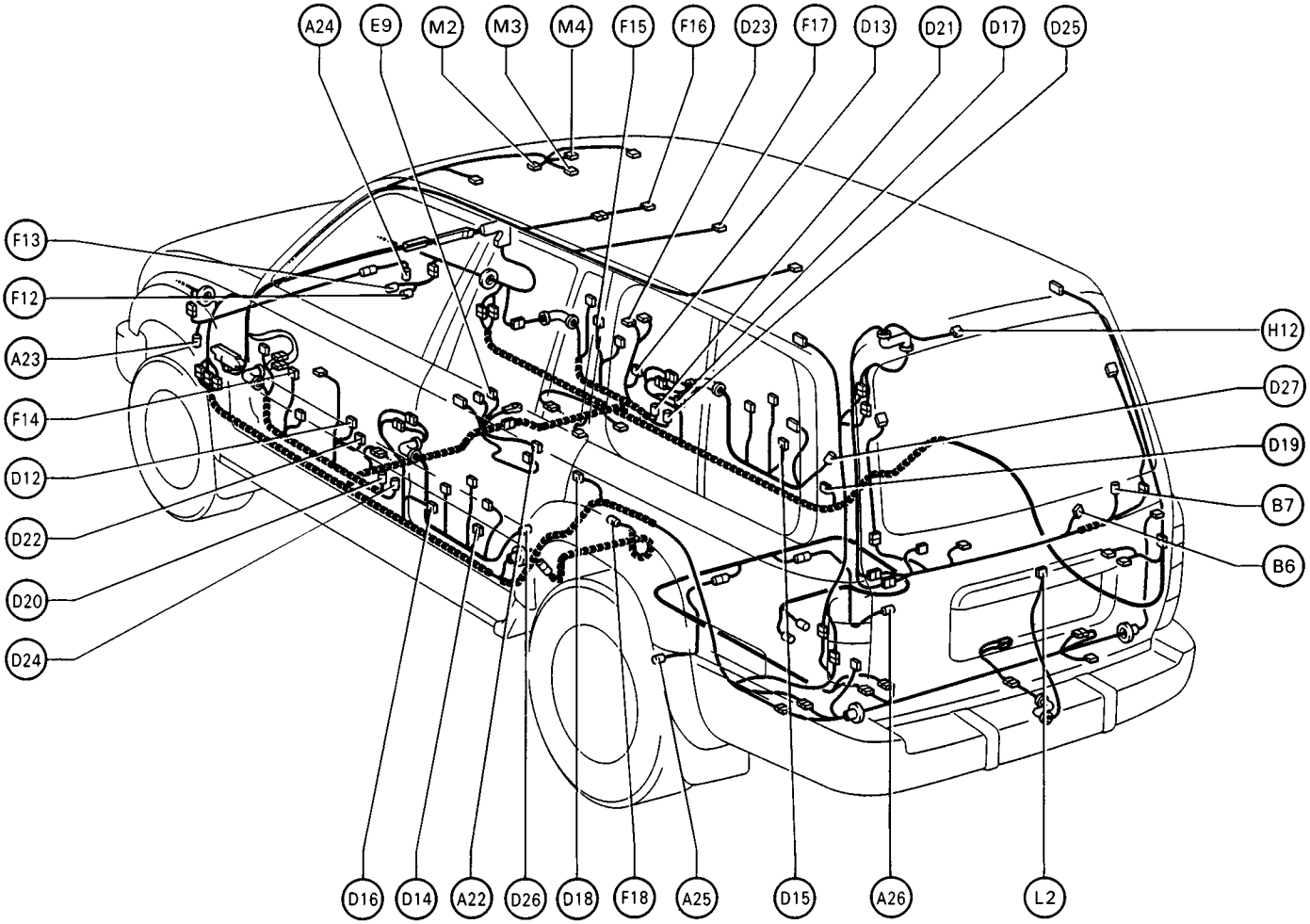

A 22 ABS Deceleration Sensor
A 23 ABS Speed Sensor Front LH
A 24 ABS Speed Sensor Front RH
A 25 ABS Speed Sensor Rear LH
A 26 ABS Speed Sensor Rear RH

B 6 Back Door Courtesy SW
B 7 Back Door Lock Motor

D 12 Door Courtesy Light Front LH
D 13 Door Courtesy Light Front RH
D 14 Door Courtesy Light Rear LH
D 15 Door Courtesy Light Rear RH
D 16 Door Courtesy SW Front LH
D 17 Door Courtesy SW Front RH
D 18 Door Courtesy SW Rear LH
D 19 Door Courtesy SW Rear RH
D 20 Door Key Lock and Unlock SW LH
D 21 Door Key Lock and Unlock SW RH
D 22 Door Lock Control Relay
D 23 Door Lock Control SW RH
D 24 Door Lock Motor and Door Unlock Detection SW Front LH
D 25 Door Lock Motor and Door Unlock Detection SW Front RH
D 26 Door Lock Motor Rear LH
D 27 Door Lock Motor Rear RH

E 9 Electronically Controlled Transmission Pattern Select SW

F 12 Front Diff. Lock Control Motor
F 13 Front Diff. Lock Position SW
F 14 Front Door Speaker LH
F 15 Front Door Speaker RH
F 16 Front Interior Light (w/ Moon Roof)
F 17 Front Interior Light (w/o Moon Roof)
F 18 Fuel Sender and Pump

H 12 High Mounted Stop Light

L 2 License Plate Light

M 2 Moon Roof Control Relay
M 3 Moon Roof Control SW and Personal Light
M 4 Moon Roof Limit SW and Motor

Position of Parts in Body

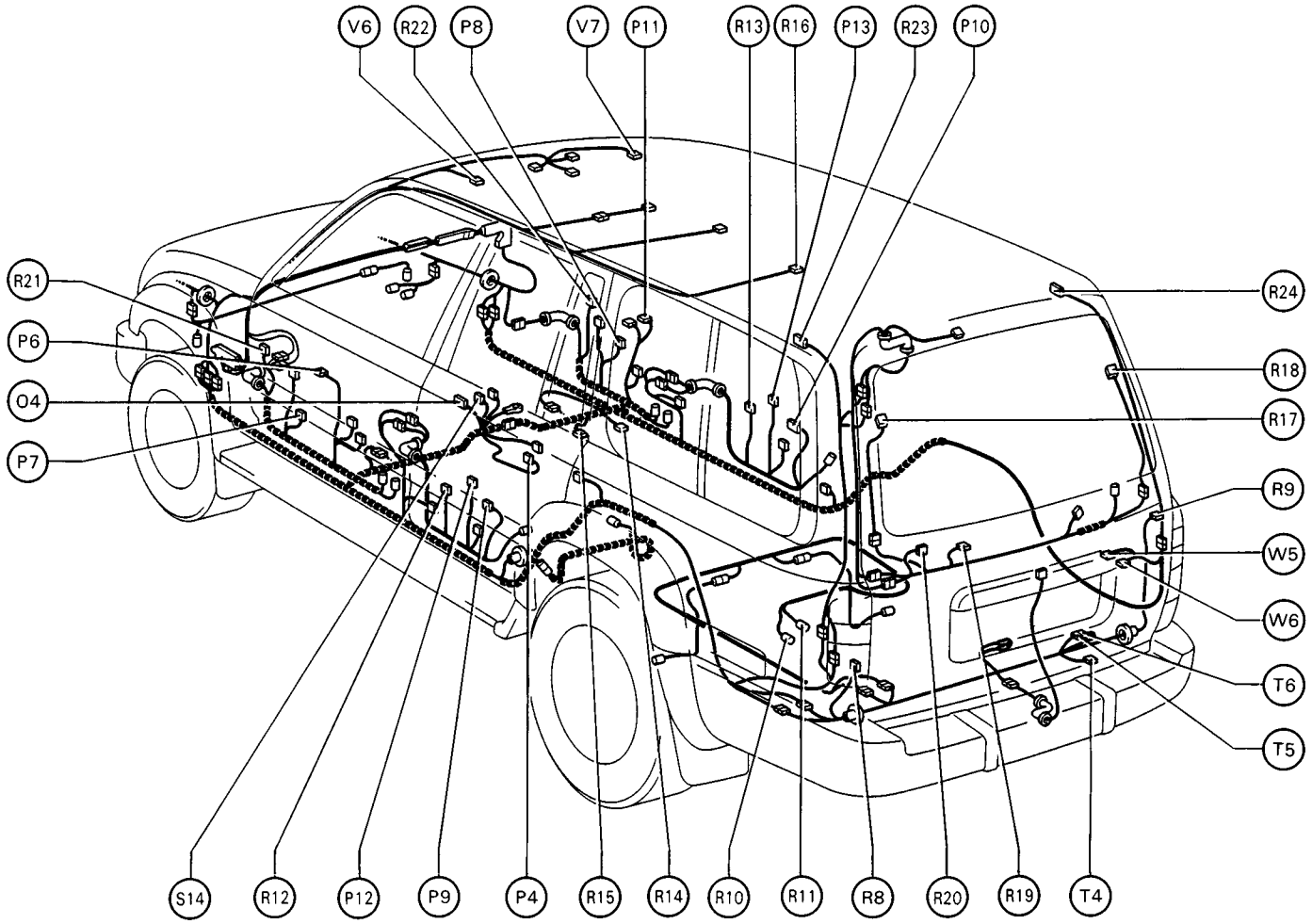

O 4 O/D Main SW

P 4 Parking Brake SW
P 6 Power Window Master SW
P 7 Power Window Motor Front LH
P 8 Power Window Motor Front RH
P 9 Power Window Motor Rear LH
P 10 Power Window Motor Rear RH
P 11 Power Window SW Front RH
P 12 Power WIndow SW Rear LH
P 13 Power Window SW Rear RH

R 8 Rear Combination Light LH
R 9 Rear Combination Light RH
R 10 Rear Diff. Lock Control Motor
R 11 Rear Diff. Lock Position SW
R 12 Rear Door Speaker LH
R 13 Rear Door Speaker RH
R 14 Rear Heater
R 15 Rear Heater Relay
R 16 Rear Interior Light
R 17 Rear Window Defogger (+)
R 18 Rear Window Defogger (-)
R 19 Rear Wiper Motor
R 20 Rear Wiper Relay
R 21 Remote Control Mirror LH
R 22 Remote Control Mirror RH
R 23 Roof Speaker LH
R 24 Roof Speaker RH

S 14 Shift Lock ECU

T 4 Trailer Socket (Tail and Stop Light)
T 5 Trailer Socket (Turn Signal Light)
T 6 Trailer Socket (Turn Signal Light)

V 6 Vanity Light LH
V 7 Vanity Light RH

W 5 Woofer (Speaker)
W 6 Woofer Amplifier

G ELECTRICAL WIRING ROUTING

Position of Parts in Seat

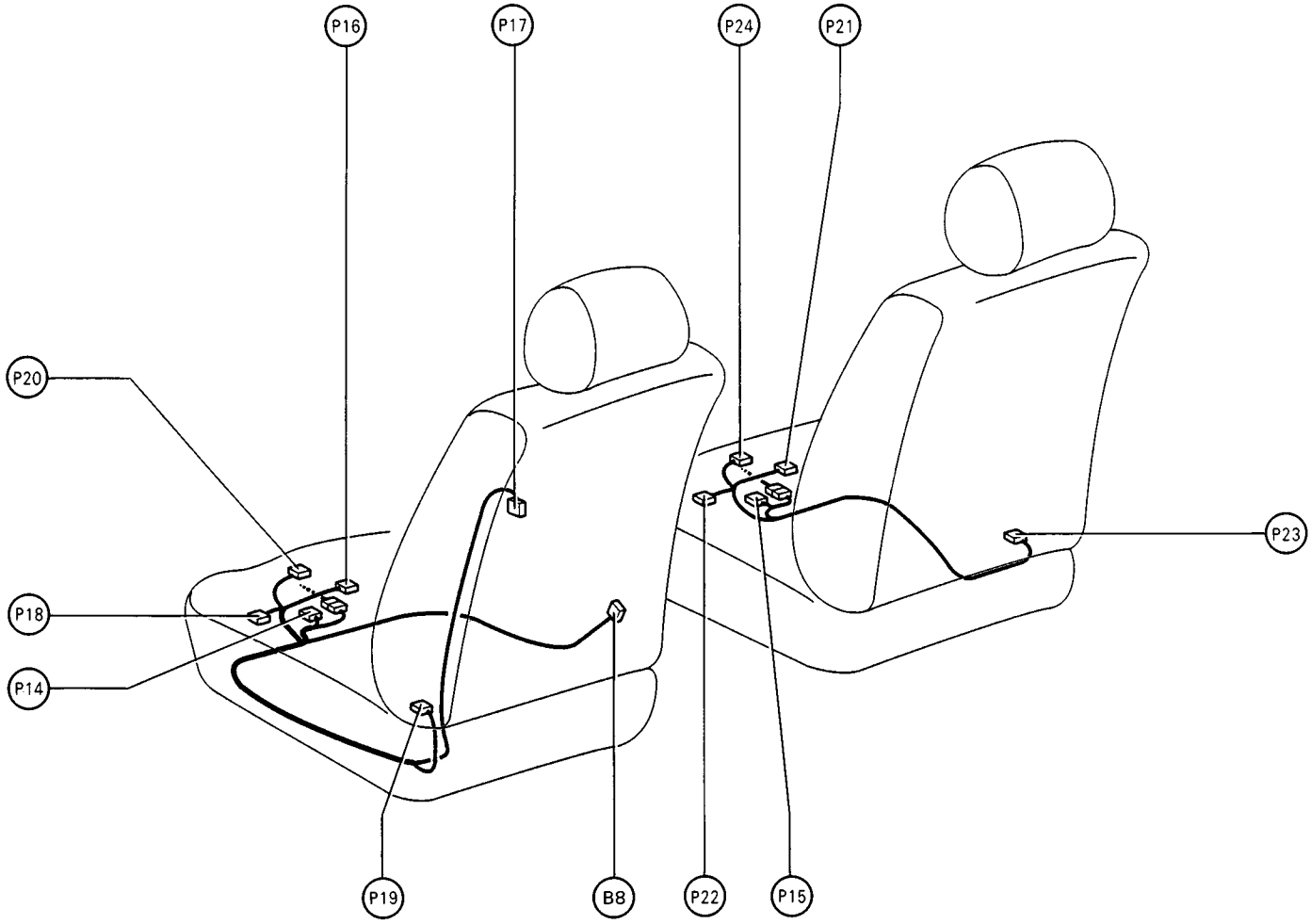

B 8 Buckle SW LH

P 14 Power Seat Control SW (Driver's Seat)
P 15 Power Seat Control SW (Passenger's Seat)
P 16 Power Seat Motor (Driver's Seat Front Vertical Control)
P 17 Power Seat Motor (Driver's Seat Lumbar Support Control)
P 18 Power Seat Motor (Driver's Seat Rear Vertical Control)
P 19 Power Seat Motor (Driver's Seat Reclining Control)
P 20 Power Seat Motor (Driver's Seat Slide Control)
P 21 Power Seat Motor (Passenger's Seat Front Vertical Control)
P 22 Power Seat Motor (Passenger's Seat Rear Vertical Control)
P 23 Power Seat Motor (Passenger's Seat Reclining Control)
P 24 Power Seat Motor (Passenger's Seat Slide Control)

MEMO

Brought to you by BirfMark

G ELECTRICAL WIRING ROUTING

▭ : Location of Connector Joining Wire Harness and Wire Harness

▽ : Location of Ground Points

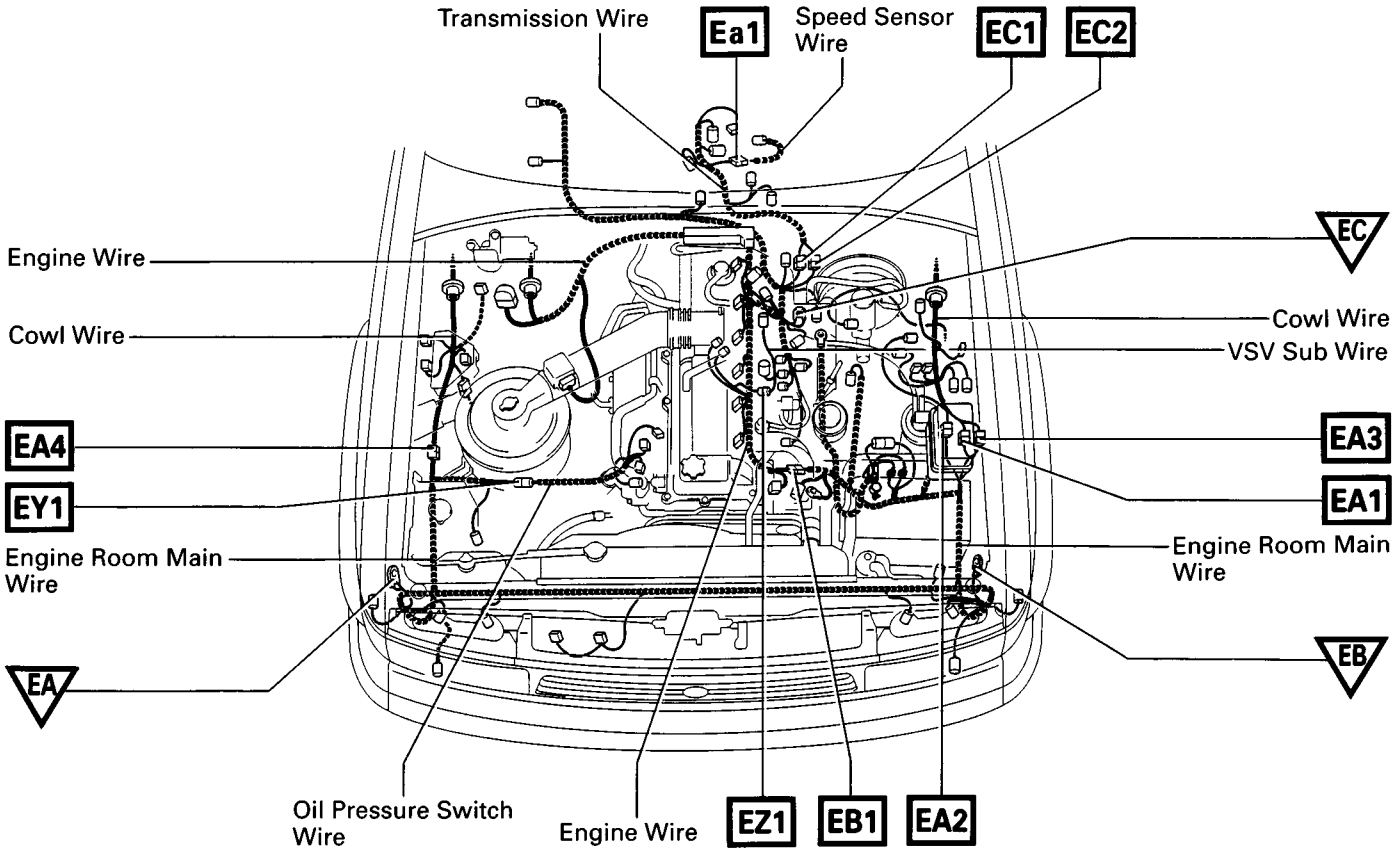

○ : Location of Splice Points

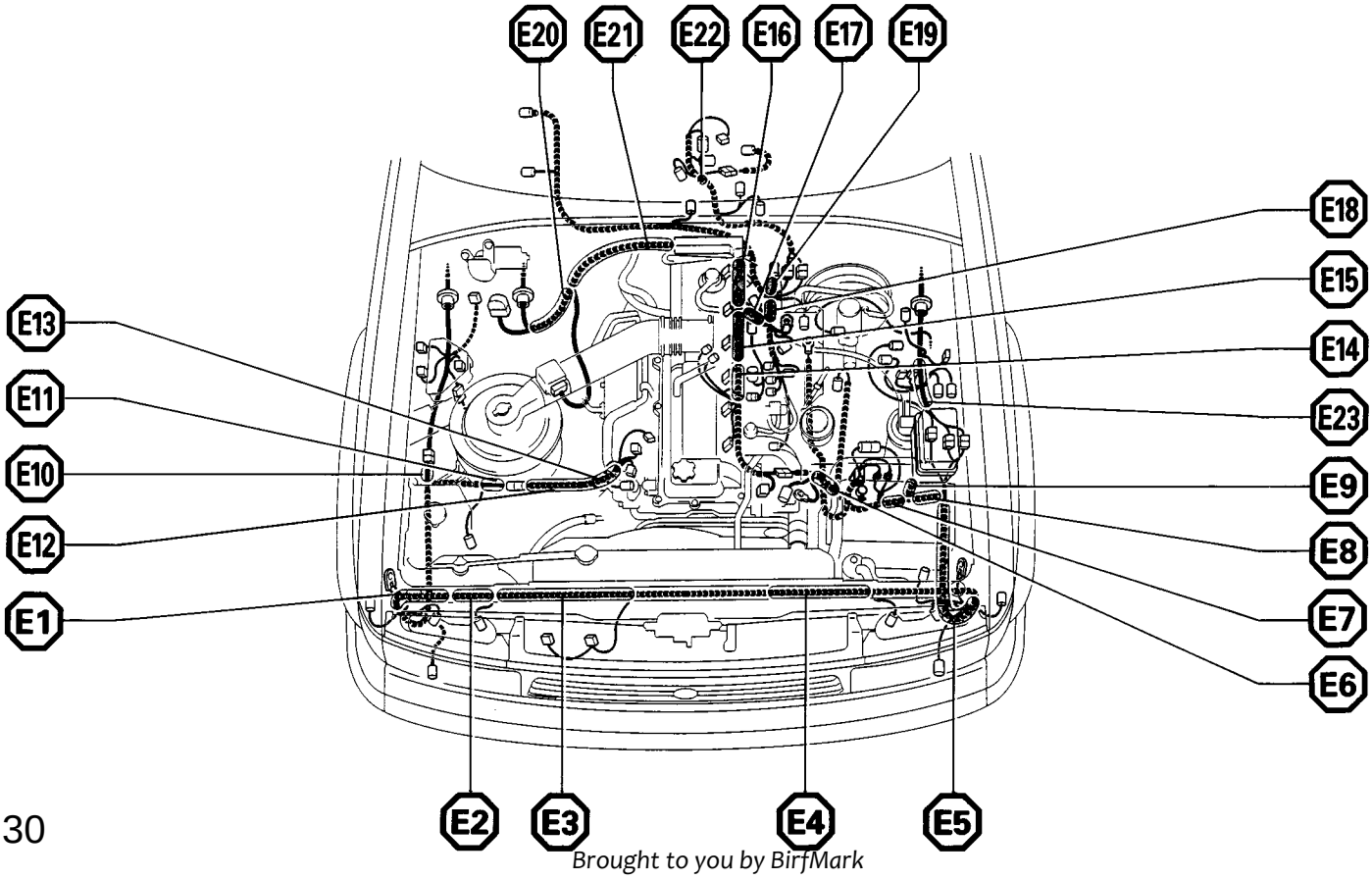

Brought to you by BirfMark

Connector Joining Wire Harness and Wire Harness

EA1 GRAY

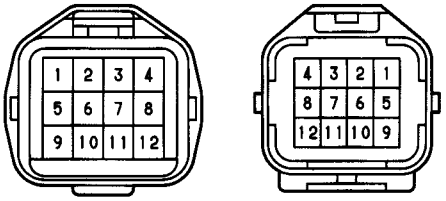

EA2 GRAY

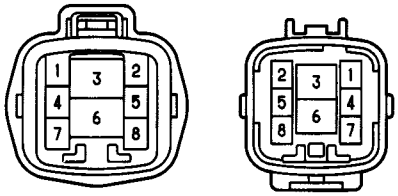

EA3 GRAY

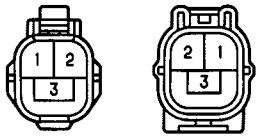

EA4 GRAY

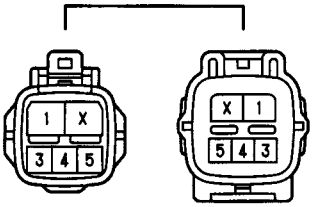

EB1 GRAY

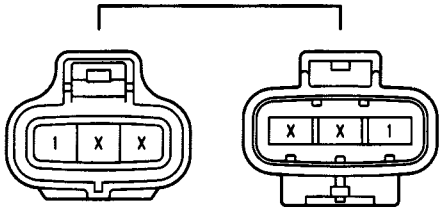

EC1 GRAY

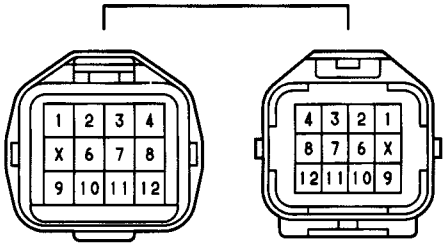

EC2 GRAY

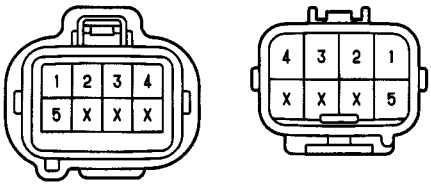

EY1 GRAY

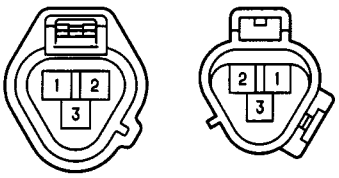

EZ1 GRAY

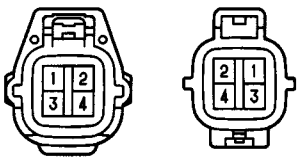

Ea1 GRAY

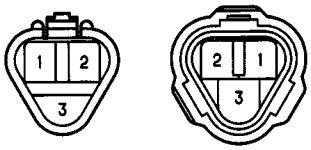

CODE	JOINING WIRE HARNESS AND WIRE HARNESS (CONNECTOR LOCATION)
EA1	COWL WIRE AND ENGINE ROOM MAIN WIRE (LEFT FENDER)
EA2	
EA3	
EA4	COWL WIRE AND ENGINE ROOM MAIN WIRE (RIGHT FENDER)
EB1	ENGINE ROOM MAIN WIRE AND ENGINE WIRE (NEAR THE DISTRIBUTOR)
EC1	ENGINE WIRE AND TRANSMISSION WIRE (NEAR THE STARTER)
EC2	
EY1	OIL PRESSURE SWITCH WIRE AND ENGINE ROOM MAIN WIRE (NEAR THE AIR CLEANER)
EZ1	ENGINE WIRE AND VSV SUB WIRE (NEAR THE THROTTLE POSITION SENSOR)
Ea1	TRANSMISSION WIRE AND SPEED SENSOR WIRE (NEAR THE TRANSMISSION)

Brought to you by BirfMark

G ELECTRICAL WIRING ROUTING

▭ : Location of Connector Joining Wire Harness and Wire Harness

▽ : Location of Ground Points

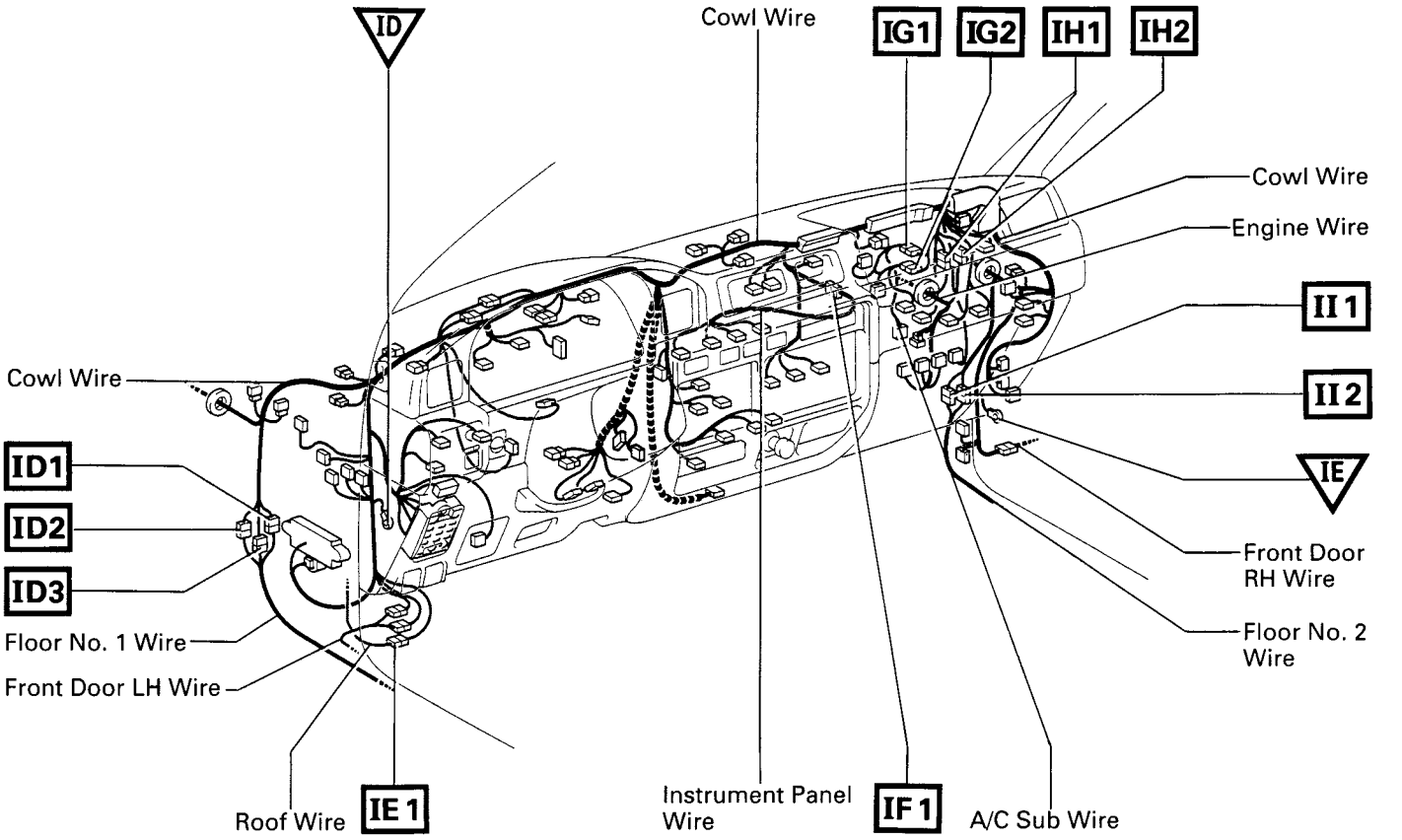

○ : Location of Splice Points

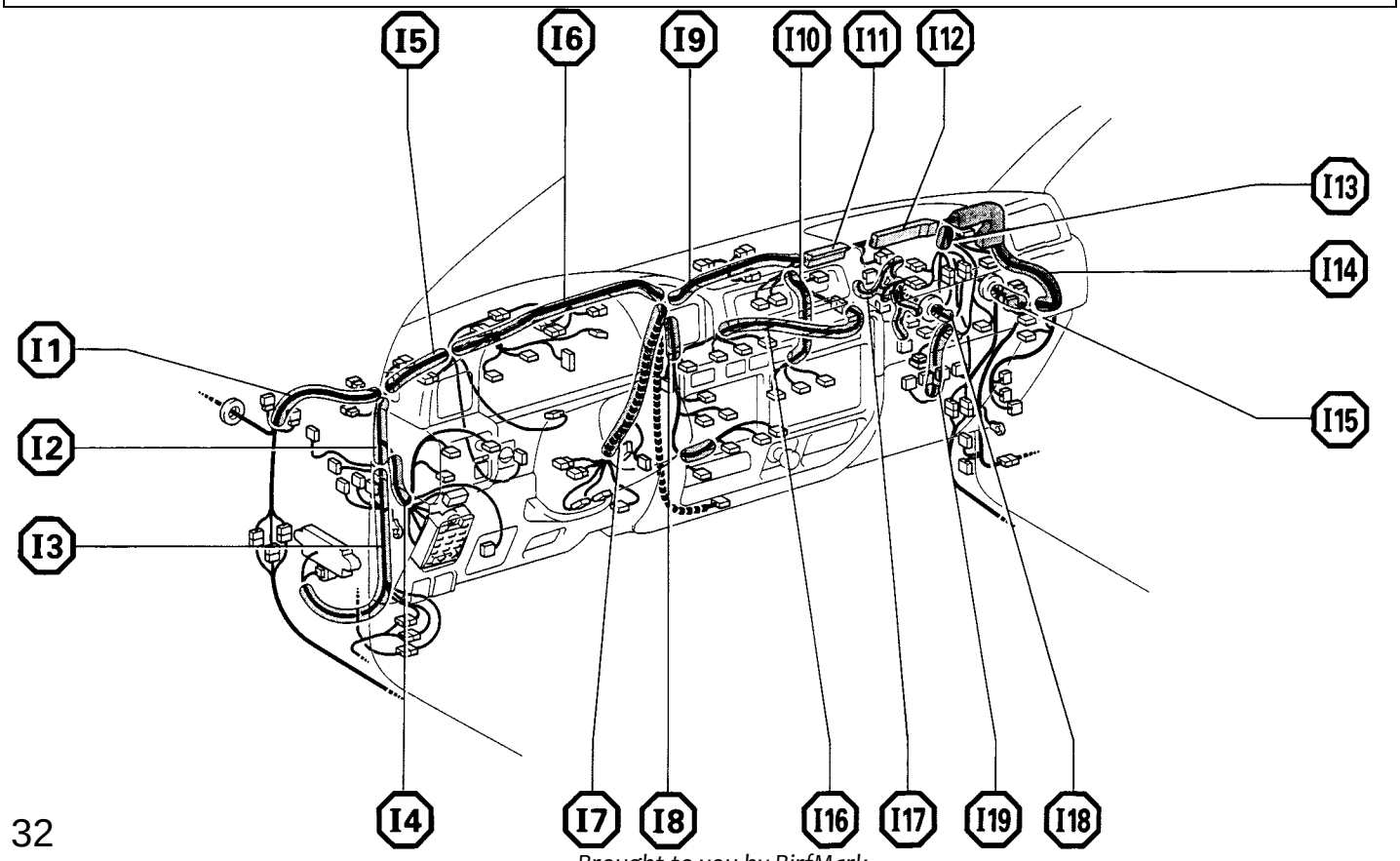

Brought to you by BirfMark

Connector Joining Wire Harness and Wire Harness

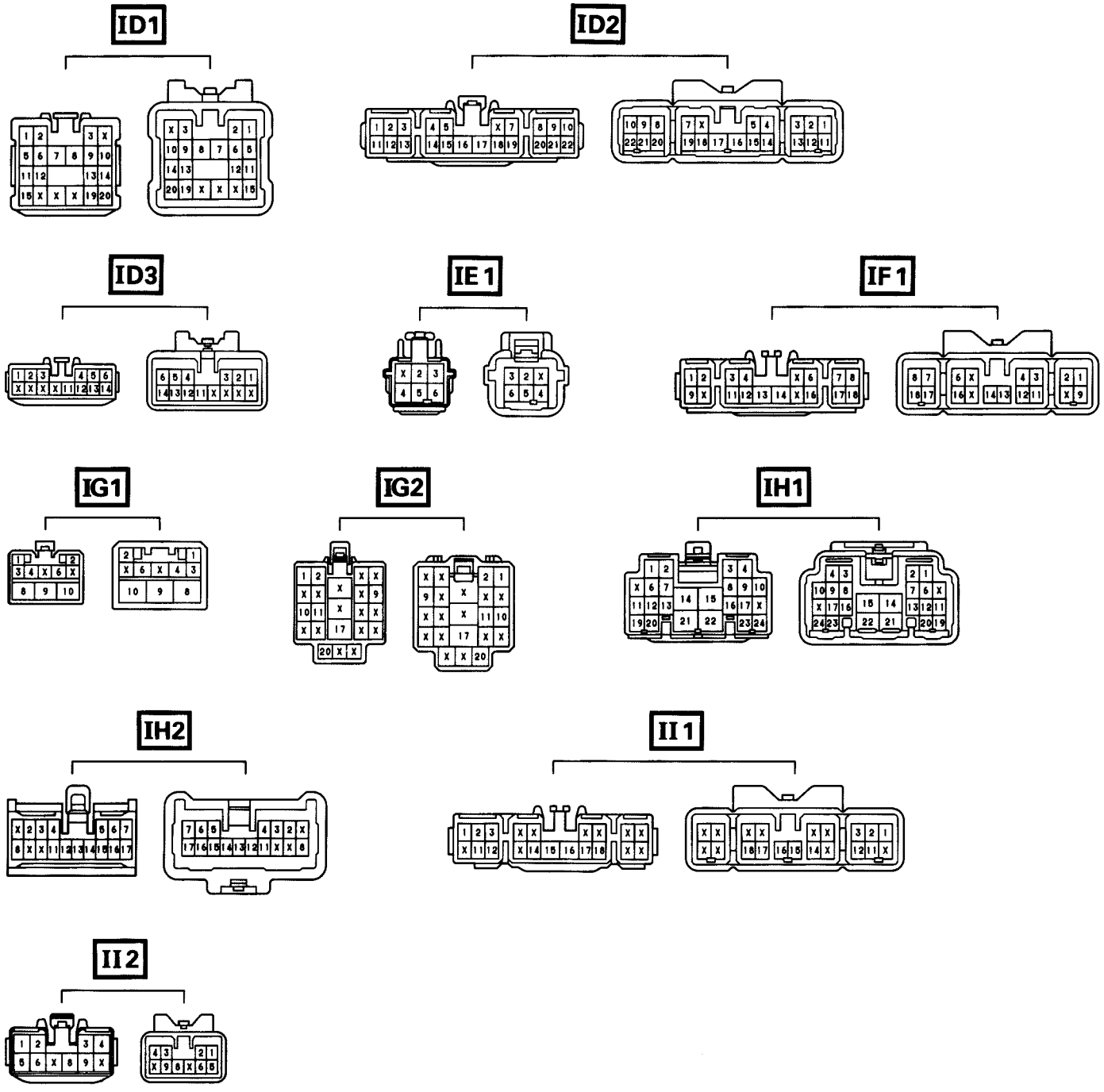

CODE	JOINING WIRE HARNESS AND WIRE HARNESS (CONNECTOR LOCATION)
ID1	COWL WIRE AND FLOOR NO. 1 WIRE (LEFT KIC NEL)
ID2	
ID3	
IE1	ROOF WIRE AND COWL WIRE (LEFT KICK PANEL)
IF1	COWL WIRE AND INSTRUMENT PANEL WIRE (INSTRUMENT PANEL CENTER)
IG1	COWL WIRE AND A/C SUB WIRE (BEHIND GLOVE BOX)
IG2	
IH1	ENGINE WIRE AND COWL WIRE (BEHIND GLOVE BOX)
IH2	
II1	COWL WIRE AND FLOOR NO. 2 WIRE (RIGHT KICK PANEL)
II2	

G ELECTRICAL WIRING ROUTING

▭ : Location of Connector Joining Wire Harness and Wire Harness

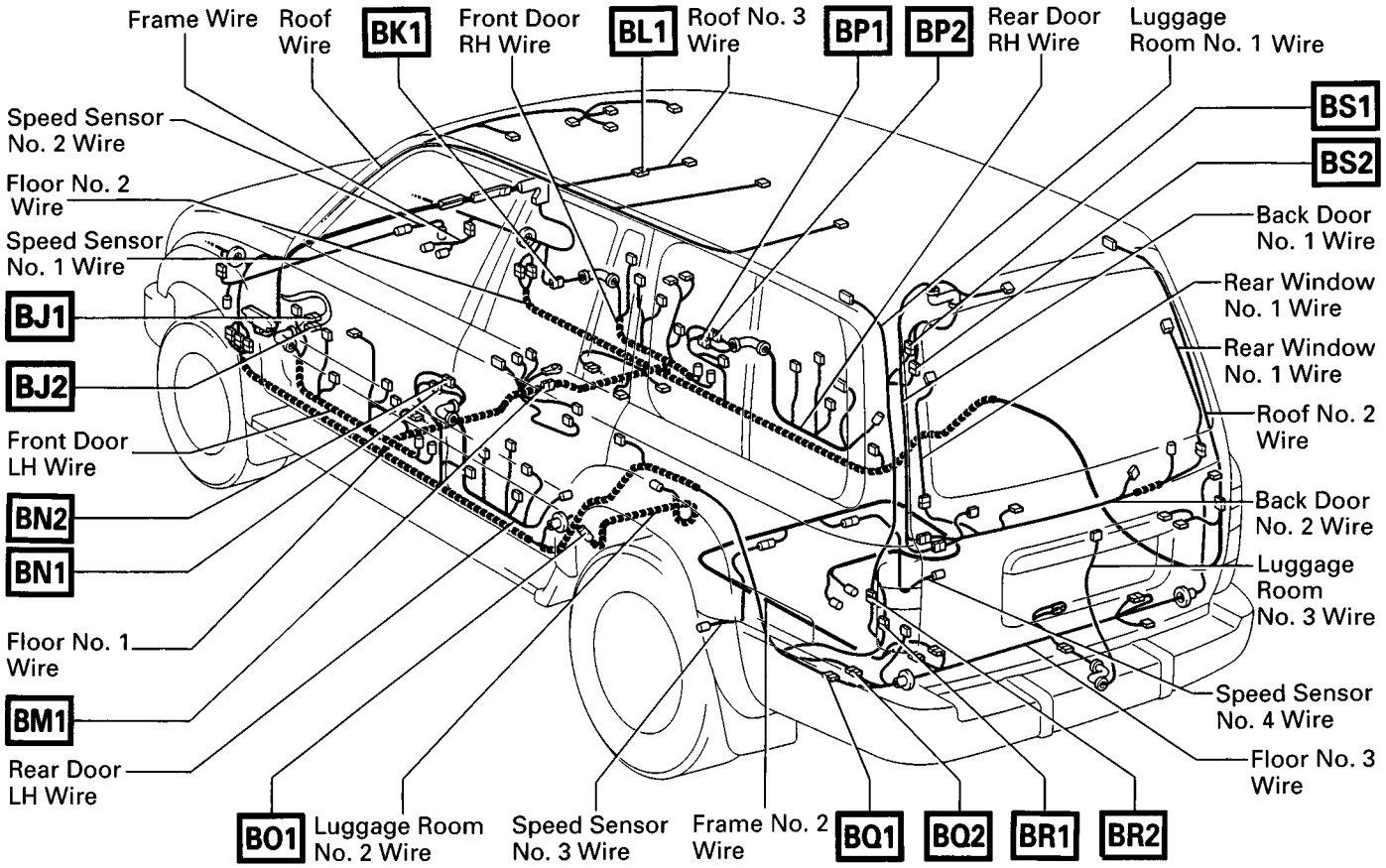

▽ : Location of Ground Points

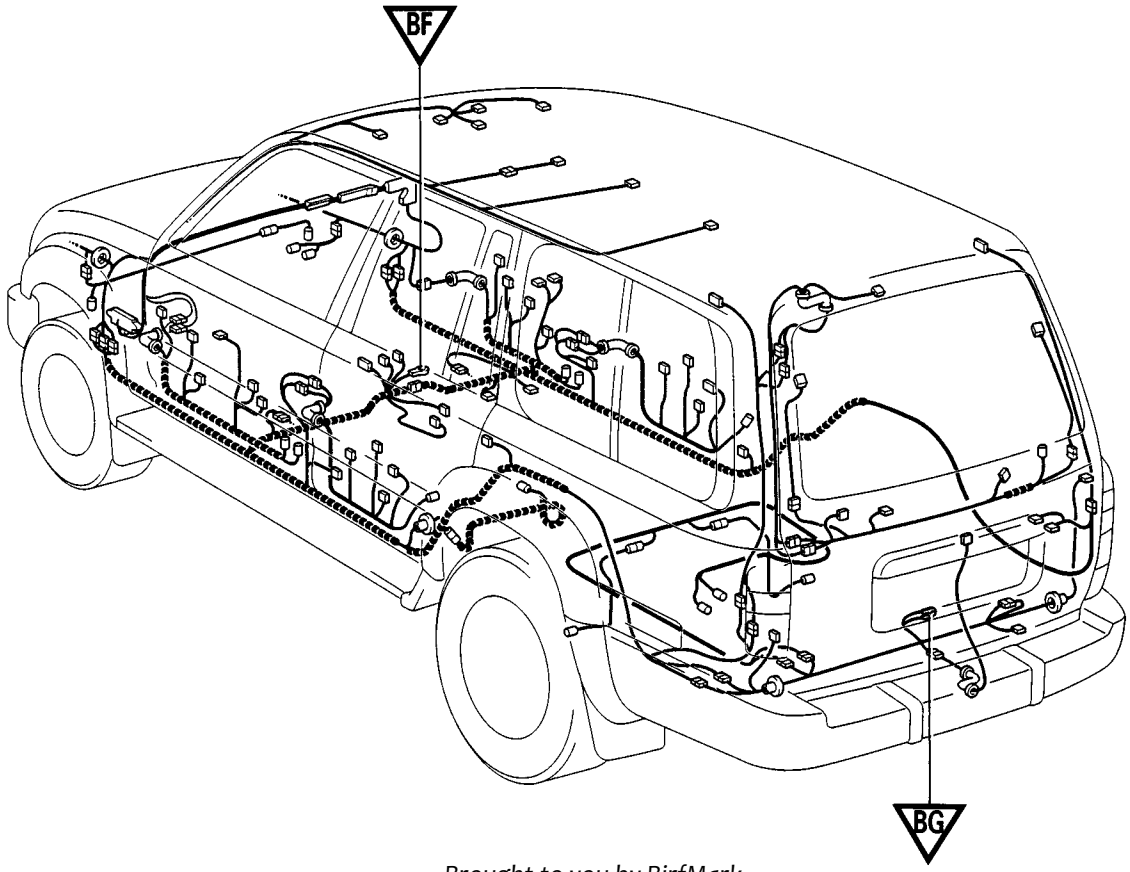

Connector Joining Wire Harness and Wire Harness

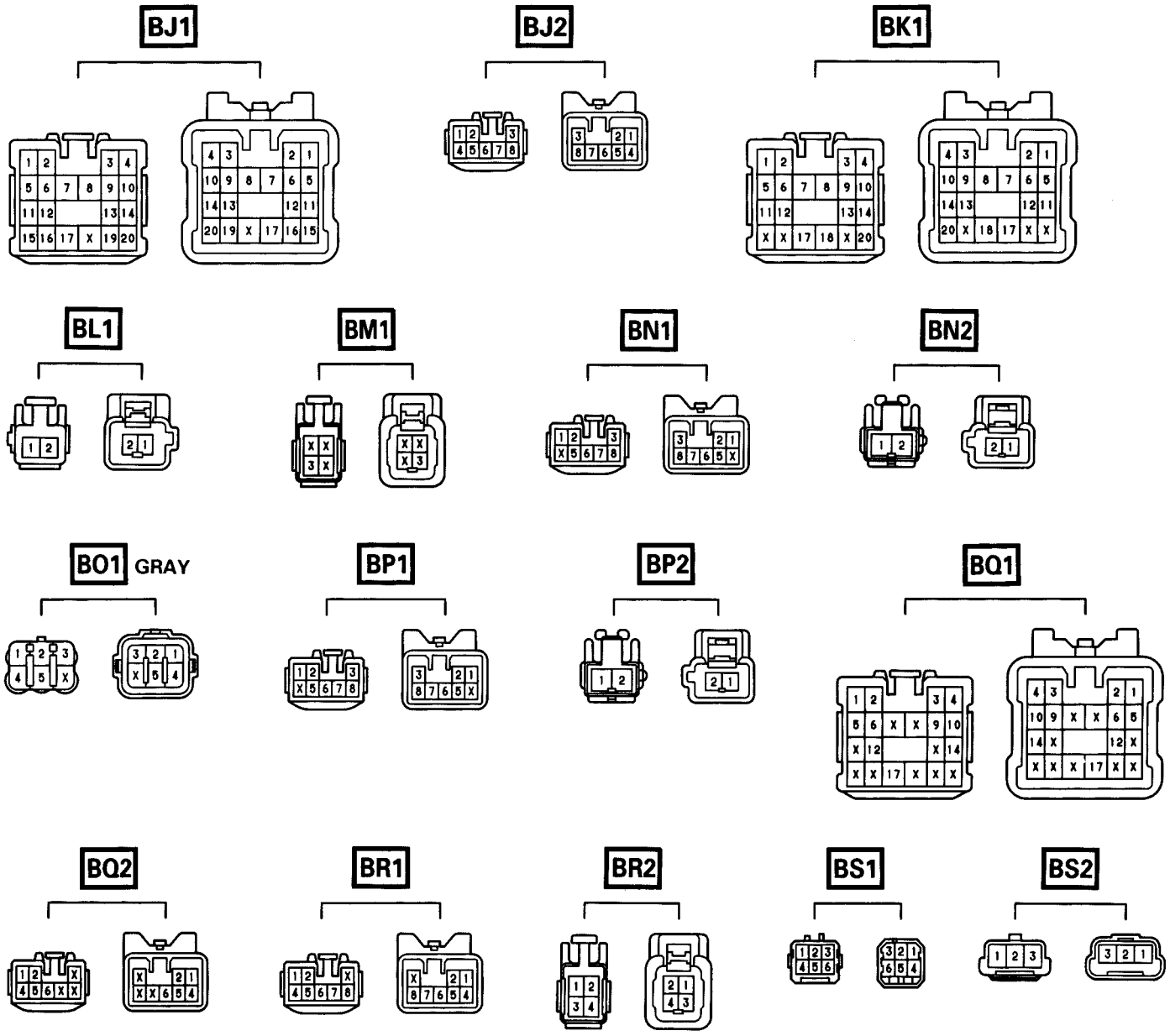

CODE	JOINING WIRE HARNESS AND WIRE HARNESS (CONNECTOR LOCATION)
BJ1	FRONT DOOR LH WIRE AND COWL WIRE (LEFT KICK PANEL)
BJ2	
BK1	FRONT DOOR RH WIRE AND COWL WIRE (RIGHT KICK PANEL)
BL1	ROOF WIRE AND ROOF NO. 3 WIRE (ROOF LEFT)
BM1	FLOOR NO. 2 WIRE AND FLOOR NO. 1 WIRE (UNDER THE CENTER CONSOLE)
BN1	REAR DOOR LH WIRE AND FLOOR NO. 1 WIRE (LEFT CENTER PILLAR)
BN2	
BO1	FLOOR NO. 1 WIRE AND LUGGAGE ROOM NO. 2 WIRE (BESIDE THE FUEL TANK)
BP1	REAR DOOR RH WIRE AND FLOOR NO. 2 WIRE (RIGHT CENTER PILLAR)
BP2	
BQ1	FLOOR NO. 3 WIRE AND FLOOR NO. 1 WIRE (LEFT QUARTER PANEL INNER)
BQ2	
BR1	LUGGAGE ROOM NO. 1 WIRE AND FLOOR NO. 1 WIRE (LEFT QUARTER PANEL INNER)
BR2	
BS1	BACK DOOR NO. 1 WIRE AND LUGGAGE ROOM NO. 1 WIRE (LEFT REAR SIDE OF ROOF)
BS2	

Brought to you by BirfMark

G ELECTRICAL WIRING ROUTING

▭ : Location of Connector Joining Wire Harness and Wire Harness

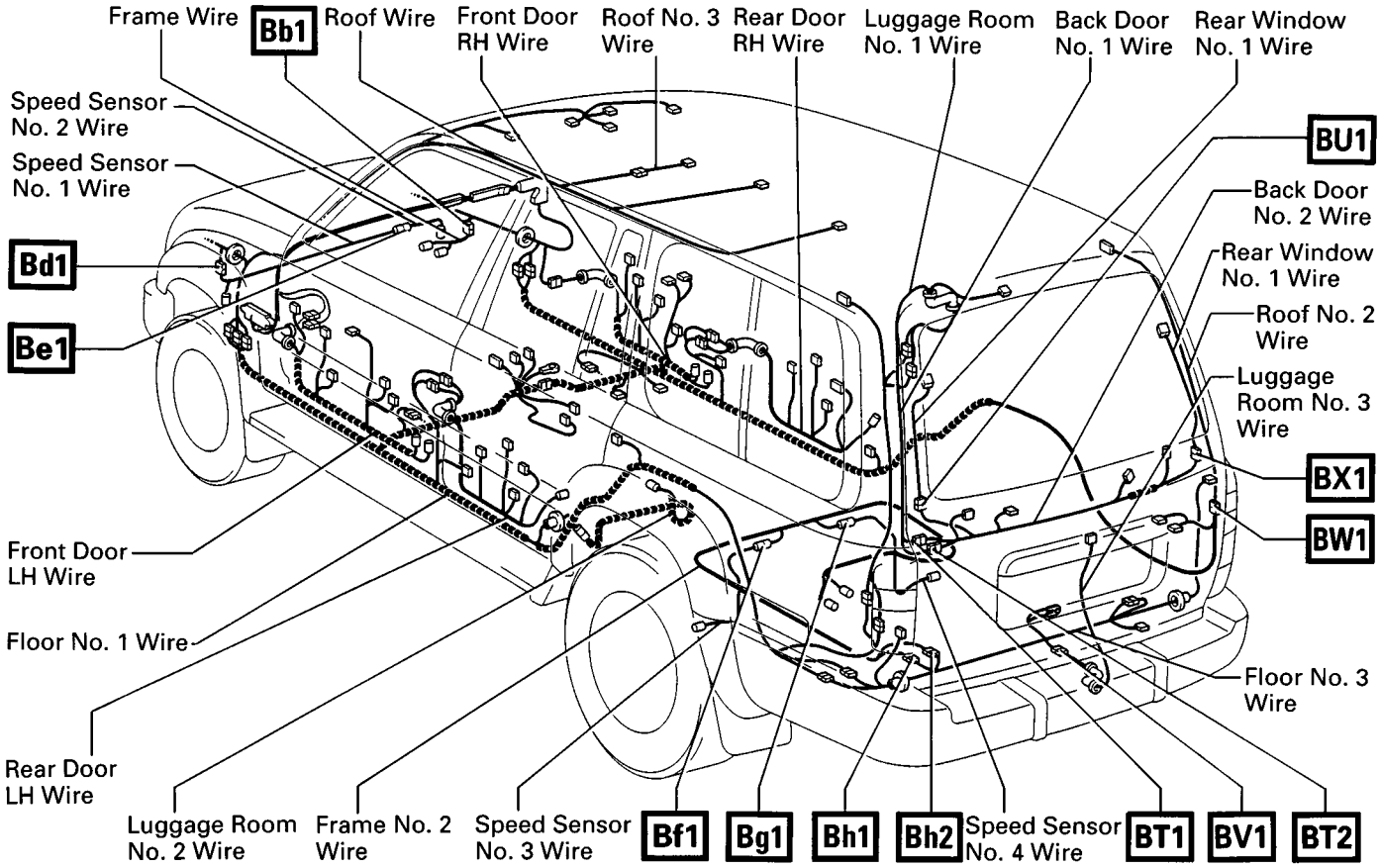

⬡ : Location of Splice Points

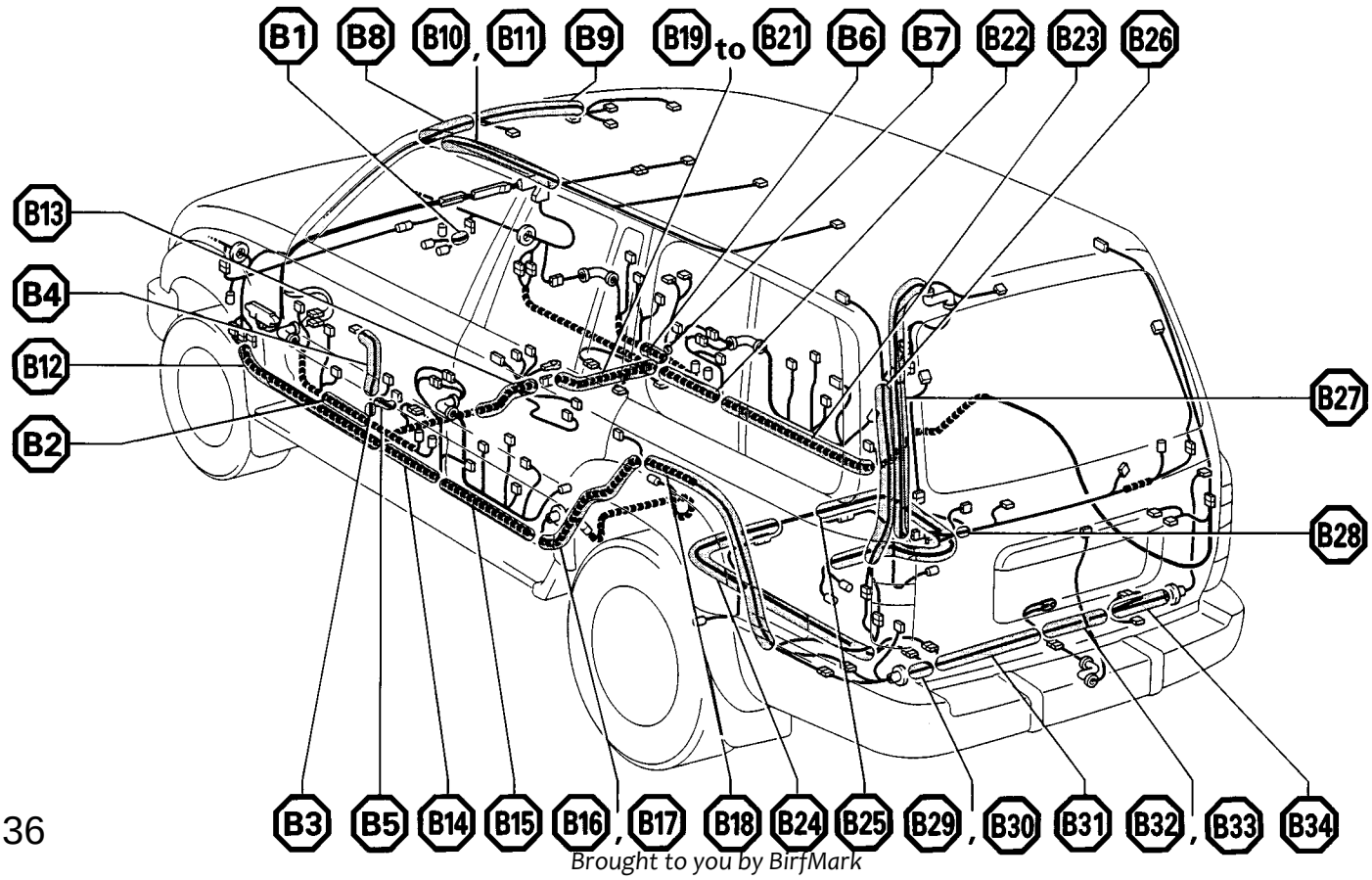

Brought to you by BirfMark

Connector Joining Wire Harness and Wire Harness

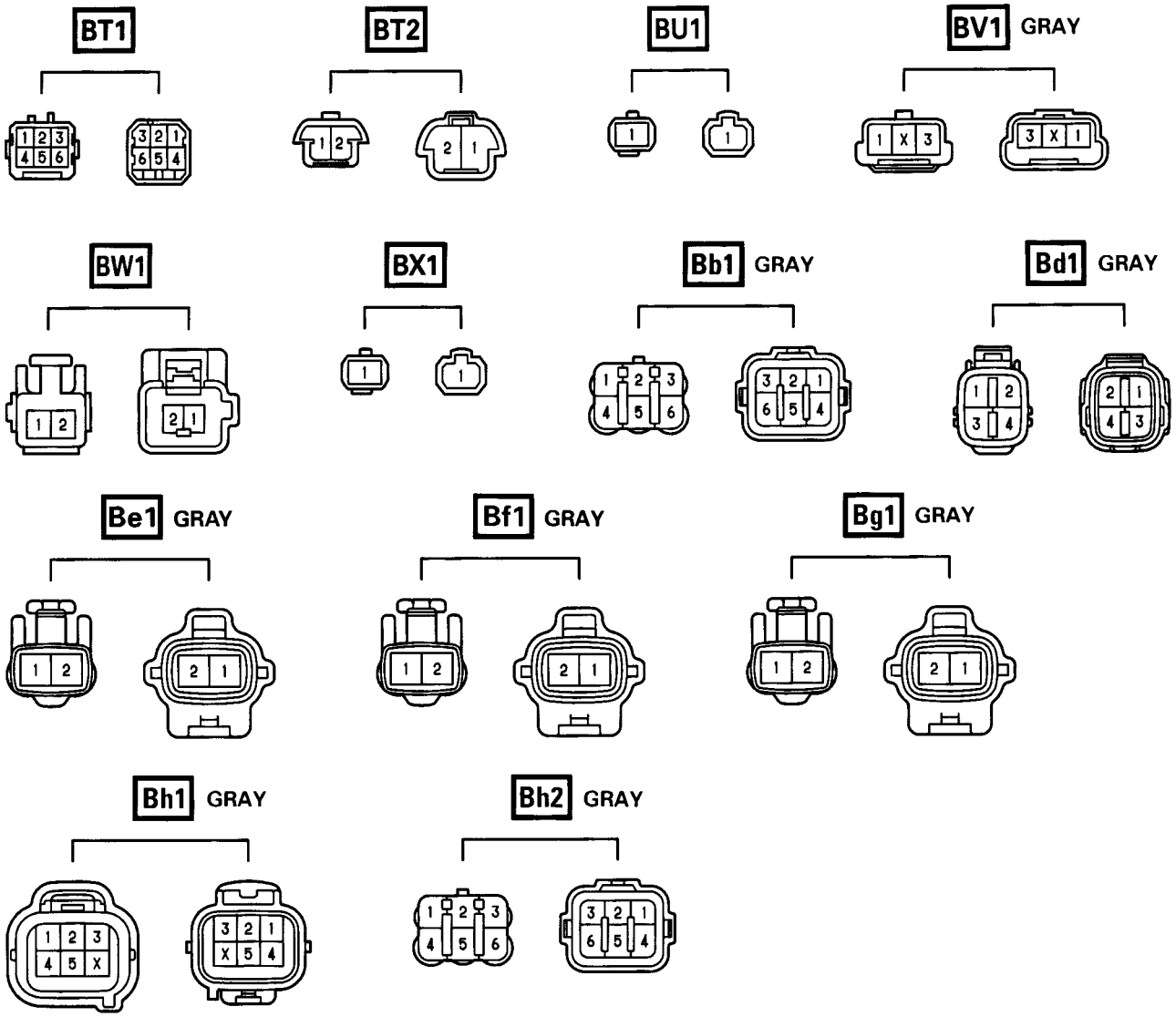

CODE	JOINING WIRE HARNESS AND WIRE HARNESS (CONNECTOR LOCATION)
BT1	BACK DOOR NO. 1 WIRE AND BACK DOOR NO. 2 WIRE (BACK DOOR LEFT)
BT2	
BU1	REAR WINDOW NO. 1 WIRE AND BACK DOOR NO. 2 WIRE (BACK DOOR LEFT)
BV1	LUGGAGE ROOM NO. 3 WIRE AND FLOOR NO. 3 WIRE (UNDER THE LOWER BACK PANEL)
BW1	ROOF NO. 2 WIRE AND FLOOR NO. 2 WIRE (RIGHT QUARTER PANEL INNER)
BX1	REAR WINDOW NO. 1 WIRE AND BACK DOOR NO. 2 WIRE (BACK DOOR RIGHT)
Bb1	COWL WIRE AND FRAME WIRE (RIGHT FENDER)
Bd1	COWL WIRE AND SPEED SENSOR NO. 1 WIRE (LEFT KICK PANEL)
Be1	SPEED SENSOR NO. 2 WIRE AND SPEED SENSOR NO. 1 WIRE (FRONT AXLE HOUSING LH)
Bf1	FRAME NO. 2 WIRE AND SPEED SENSOR NO. 3 WIRE (REAR AXLE HOUSING LH)
Bg1	FRAME NO. 2 WIRE AND SPEED SENSOR NO. 4 WIRE (REAR AXLE HOUSING RH)
Bh1	FLOOR NO. 3 WIRE AND FRAME NO. 2 WIRE (LEFT QUARTER PANEL INNER)
Bh2	

Brought to you by BirfMark

▭ : Location of Connector Joining Wire Harness and Wire Harness

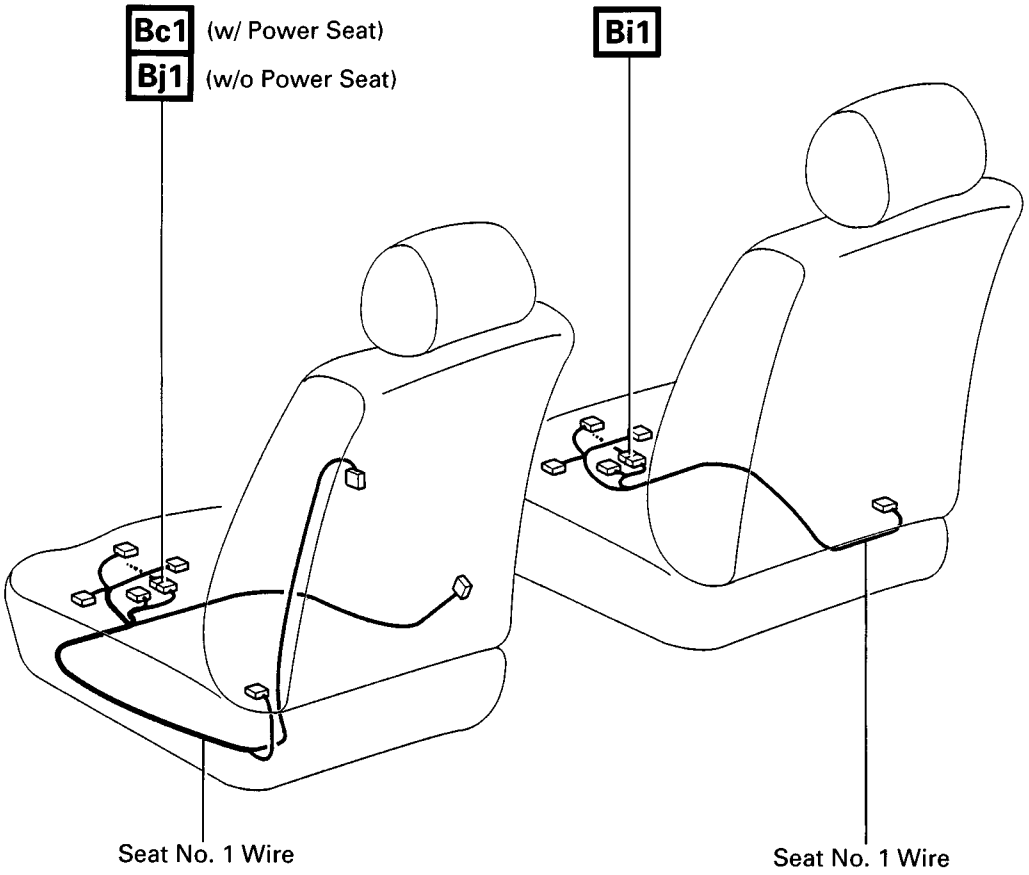

⬡ : Location of Splice Points

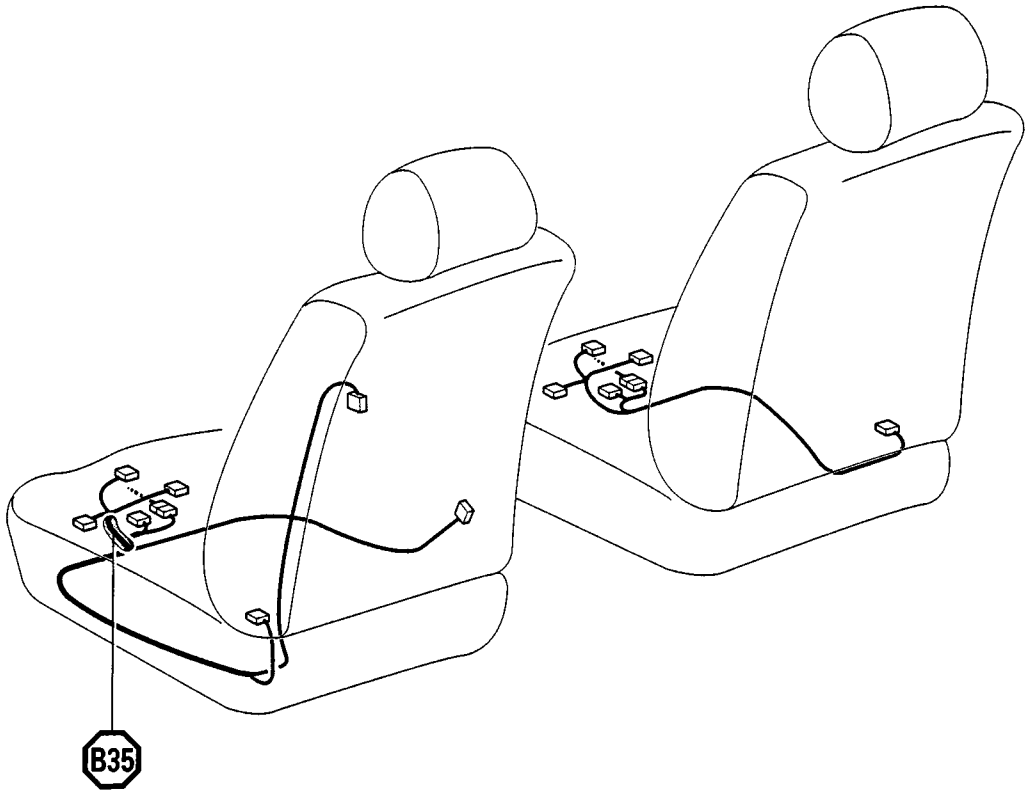

Brought to you by BirfMark

Connector Joining Wire Harness and Wire Harness

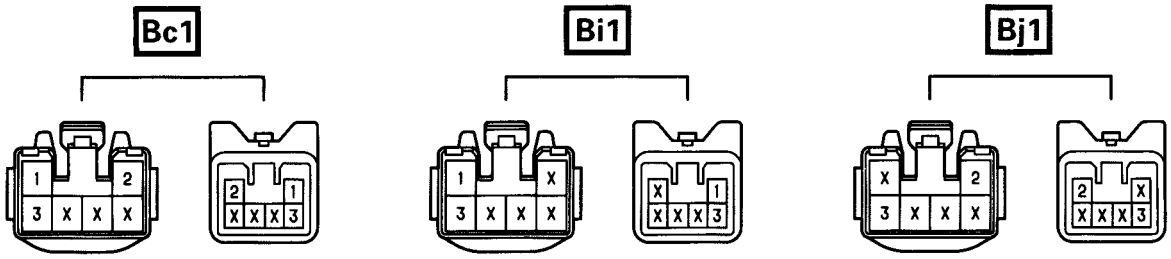

CODE	JOINING WIRE HARNESS AND WIRE HARNESS (CONNECTOR LOCATION)
Bc1	FLOOR NO. 1 WIRE AND SEAT NO. 1 WIRE (UNDER THE DRIVER'S SEAT)
Bi1	FLOOR NO. 2 WIRE AND SEAT NO. 1 WIRE (UNDER THE PASSENGER'S SEAT)
Bj1	FLOOR NO. 1 WIRE AND SEAT NO. 2 WIRE (UNDER THE DRIVER'S SEAT)

Brought to you by BirfMark

H POWER SOURCE (Current Flow Chart)

The chart below shows the route by which current flows from the battery to each electrical source (Fusible Link, Circuit Breaker, Fuse, etc.) and other parts.
The next page and following pages show the parts to which each electrical source outputs current.

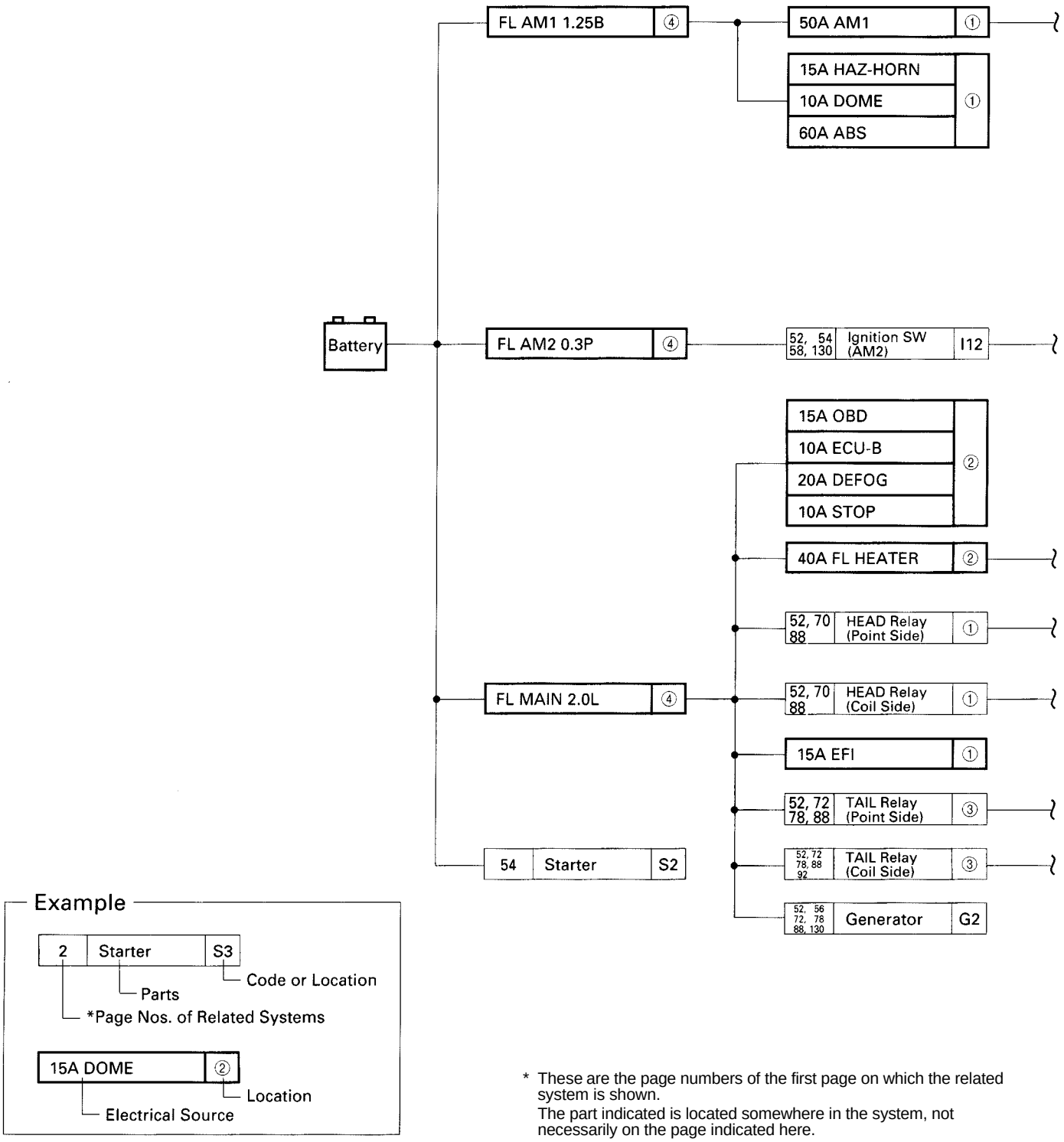

* These are the page numbers of the first page on which the related system is shown.
The part indicated is located somewhere in the system, not necessarily on the page indicated here.

[LOCATION] ① : R/B No. 2 (See page 18) ② : Fuse Block (F11 See page 20)

Brought to you by BirfMark

Brought to you by BirfMark

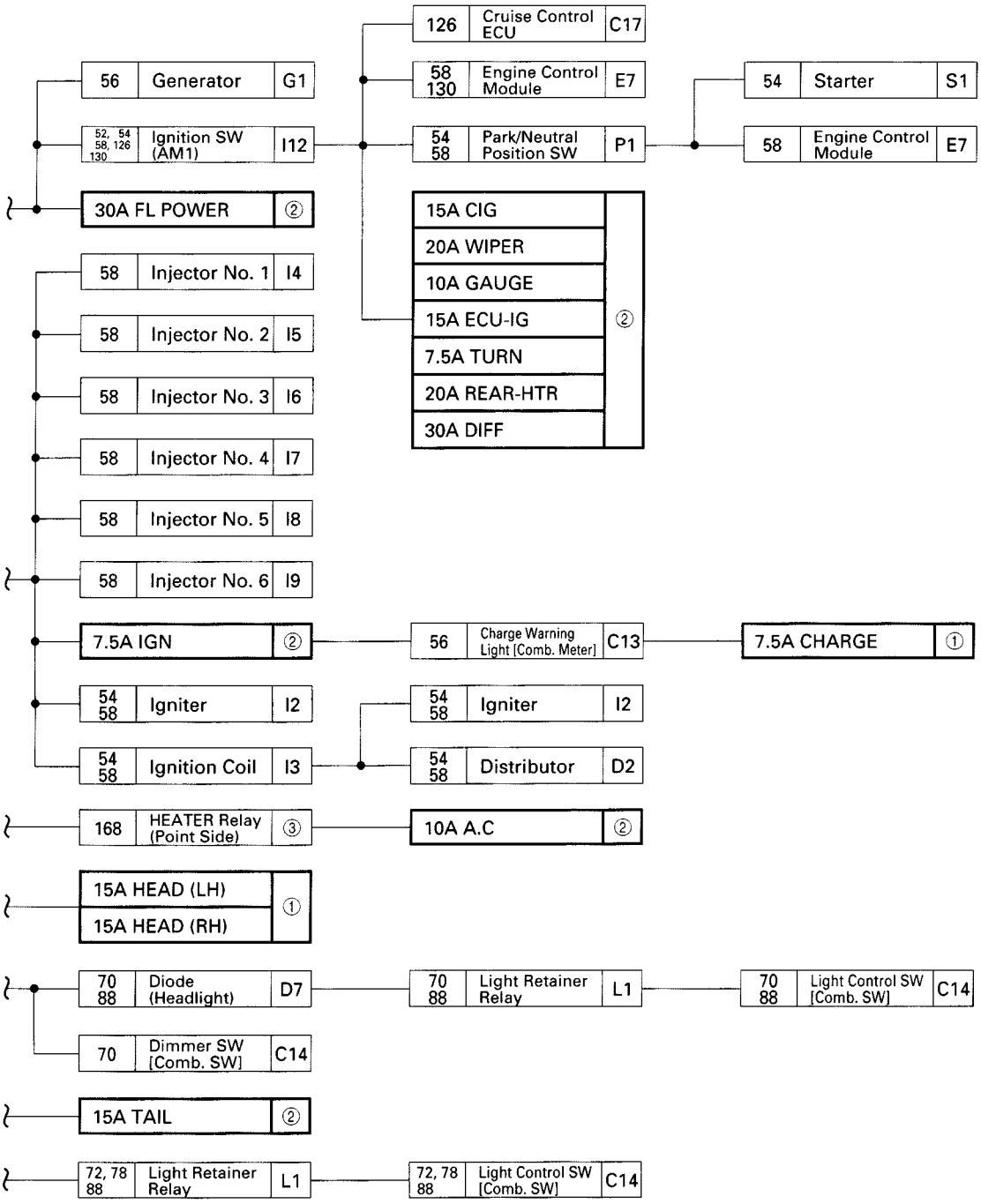

③ : R/B No. 1 (See page 20)

④ : Fusible Link (F6, F7, F8 See page 22)

Brought to you by BirfMark

Brought to you by BirfMark

H POWER SOURCE (Current Flow Chart)

Location	CB or Fuse		*Page Nos. of Related Systems																						
			168	121			117	168		121		168		143	78	78 117	121	162	168				82	112
			Parts: A/C Pressure SW	ABS Actuator	ABS Relay		Auto Antenna Motor	A/C Amplifier	A/C System Amplifier	ABS ECU		Air Inlet Control Servo Motor	Air Vent Mode Control Servo Motor	Airbag Sensor Assembly	Ashtray Illumination	Auto Antenna Control SW	ABS Deceleration Sensor	Brake Fluid Level Warning SW	Blower Motor (A/C)	Blower Motor (Heater)	Blower Resistor	Blower Speed Control Relay	Back Door Courtesy SW	Back Door Lock Motor
			Code or Location: A2	A4	A6	A7	A8	A9	A10	A12	A13	A14	A16	A17	A20	A21	A22	B1	B2	B3	B4	B5	B6	B7
①	7.5A	CHARGE																						
	15A	EFI																						
	15A	HEAD (LH)																						
	15A	HEAD (RH)																						
	15A	HAZ-HORN																						
	10A	DOME																					●	
	60A	ABS		●	●	●					●													
②	15A	CIG					●							●		●								
	15A	TAIL													●	●								
	10A	STOP								●														
	20A	DEFOG																						
	20A	WIPER																						
	10A	GAUGE	●	●		●		●	●	●	●	●	●					●				●		
	7.5A	TURN																						
	15A	ECU-IG									●						●							
	20A	REAR-HTR																						
	7.5A	IGN												●										
	10A	A.C																						
	30A	DIFF																						
	30A	FL POWER																						●
	40A	FL HEATER																	●	●	●	●		
	10A	ECU-B									●			●										
	15A	OBD																						

* These are the page numbers of the first page on which the related system is shown.
The part indicated is located somewhere in the system, not necessarily on the page indicated here.

[LOCATION] ① : R/B No. 2 (See page 18)
② : Fuse Block (F11 See page 20)
③ : R/B No. 1 (See page 20)

Brought to you by BirfMark

Brought to you by BirfMark

140	150	150 152	150	102	78	58	102	121 150 152 162	126	58	140	143	86		78 130 162	78 130 150 162	70	82	70	97	86	91	94	156	126	58 121 143	58	152
Buckle SW LH	Center Diff. Lock Control Motor	Center Diff. Lock Indicator SW	Center Diff. Lock Control Relay	Cigarette Lighter	Cigarette Lighter Illumination	Circuit Opening Relay	Clock	Combination Meter	Cruise Control Indicator Light [Comb. Meter]	Malfunction Indicator Lamp [Comb. Meter]	Seat Belt Warning Light [Comb. Meter]	SRS Warning Light [Comb. Meter]	Turn Signal Indicator Light LH [Comb. Meter]	Turn Signal Indicator Light RH [Comb. Meter]	Combination Meter	Combination Meter	High Beam Indicator Light [Comb. Meter]	Open Door Warning Light [Comb. Meter]	Dimmer SW [Comb. SW]	Horn SW [Comb. SW]	Turn Signal SW [Comb. SW]	Front Wiper and Washer SW [Comb. SW]	Rear Wiper and Washer SW [Comb. SW]	Cooling Fan (Radio and Player)	Cruise Control ECU	Data Link Connector 1	Data Link Connector 3	Diff. Lock Control SW
B8	C1	C2	C5	C6	C7	C8	C9	C10					C11		C12	C13			C14			C15		C16	C17	D1	D3	D4
						●																				●		
																			●									
																●	●		●									
													●	●						●								
							●									●		●										
				●			●																					
					●		●								●	●												
																						●	●					
●	●	●	●					●	●	●	●				●	●								●	●	●		
													●	●							●							
															●										●			
						●										●												
	●		●																									●
											●														●	●		
																											●	

Brought to you by BirfMark

Brought to you by BirfMark

H POWER SOURCE (Current Flow Chart)

Location	CB or Fuse		*Page Nos. of Related Systems	152	91	82			94	82							98 108 112	112				150
			Parts	Diff. Lock ECU	Diode (Front Washer)	Diode (Interior Light)			Diode (Rear Washer)	Door Courtesy Light Front LH	Door Courtesy Light Front RH	Door Courtesy Light Rear LH	Door courtesy Light Rear RH	Door Courtesy SW Front LH	Door Courtesy SW Front RH	Door Courtesy SW Rear LH	Door Courtesy SW Rear RH	Door Lock Control Relay	Door Lock Motor and Door Unlock Detection SW Front LH	Door Lock Motor and Door Unlock Detection SW Front RH	Door Lock Motor Rear LH	Door Lock Motor Rear RH	Diode (Neutral Detection)
			Code or Location	D5	D6	D8	D9	D10	D11	D12	D13	D14	D15	D16	D17	D18	D19	D22	D24	D25	D26	D27	D28
①	7.5A	CHARGE																					
	15A	EFI																					
	15A	HEAD (LH)																					
	15A	HEAD (RH)																					
	15A	HAZ-HORN																					
	10A	DOME				●	●	●		●	●	●	●	●	●	●	●						
	60A	ABS																					
②	15A	CIG																					
	15A	TAIL																					
	10A	STOP																					
	20A	DEFOG																					
	20A	WIPER			●				●														
	10A	GAUGE		●														●					●
	7.5A	TURN																					
	15A	ECU-IG																					
	20A	REAR-HTR																					
	7.5A	IGN																					
	10A	A.C																					
	30A	DIFF		●																			
	30A	FL POWER																●	●	●	●	●	
	40A	FL HEATER																					
	10A	ECU-B																					
	15A	OBD																					

* These are the page numbers of the first page on which the related system is shown.
The part indicated is located somewhere in the system, not necessarily on the page indicated here.

[LOCATION] ① : R/B No. 2 (See page 18)
② : Fuse Block (F11 See page 20)
③ : R/B No. 1 (See page 20)

Brought to you by BirfMark

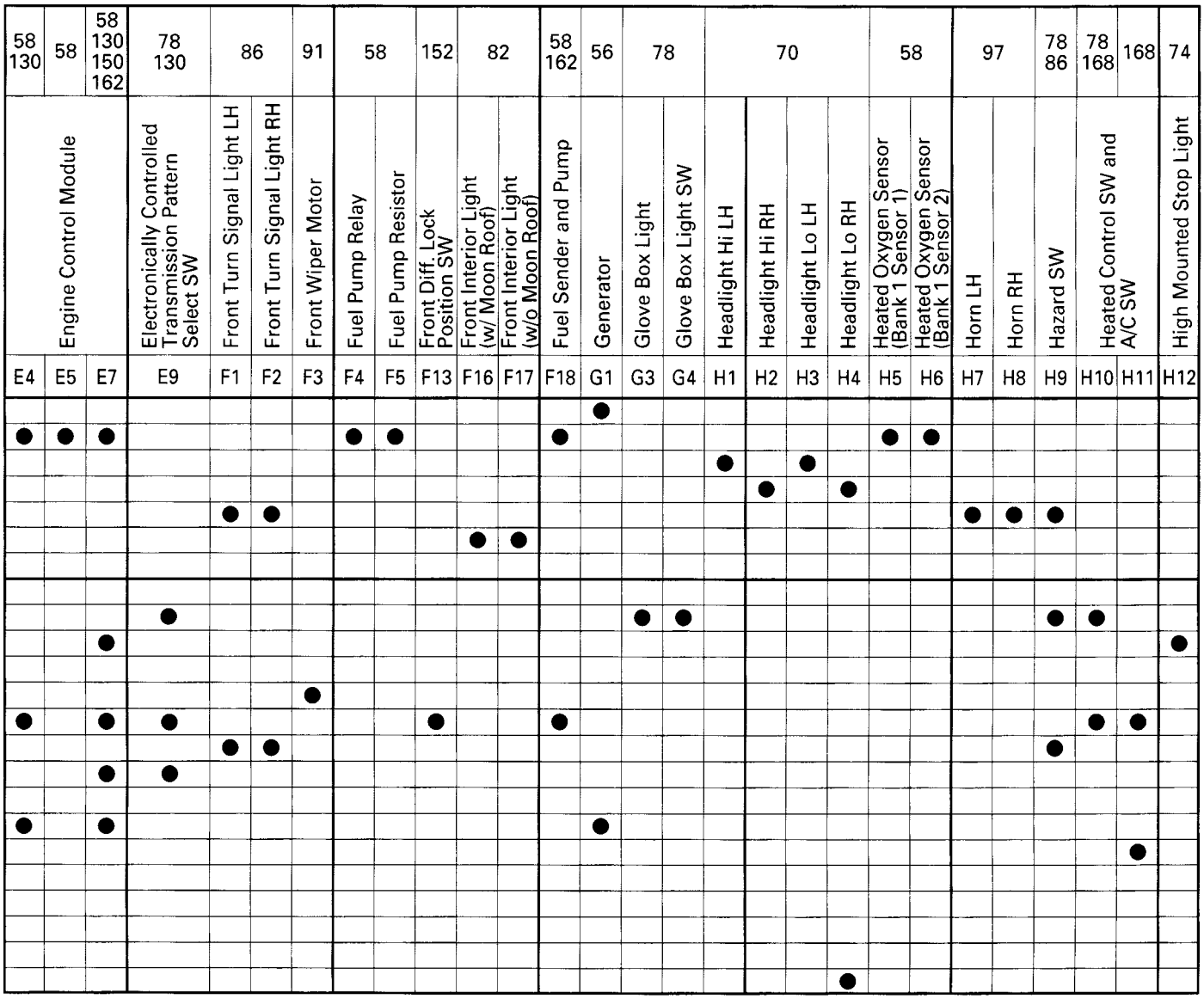
58 130
58
58 130 150 162
78 130
86
91
58
152
82
58 162
56
78
70
58
97
78 86
78 168
168
74
Engine Control Module
Electronically Controlled Transmission Pattern Select SW
Front Turn Signal Light LH
Front Turn Signal Light RH
Front Wiper Motor
Fuel Pump Relay
Fuel Pump Resistor
Front Diff. Lock Position SW
Front Interior Light (w/ Moon Roof)
Front Interior Light (w/o Moon Roof)
Fuel Sender and Pump
Generator
Glove Box Light
Glove Box Light SW
Headlight Hi LH
Headlight Hi RH
Headlight Lo LH
Headlight Lo RH
Heated Oxygen Sensor (Bank 1 Sensor 1)
Heated Oxygen Sensor (Bank 1 Sensor 2)
Horn LH
Horn RH
Hazard SW
Heated Control SW and A/C SW
High Mounted Stop Light
E4
E5
E7
E9
F1
F2
F3
F4
F5
F13
F16
F17
F18
G1
G3
G4
H1
H2
H3
H4
H5
H6
H7
H8
H9
H10
H11
H12

Brought to you by BirfMark

H POWER SOURCE (Current Flow Chart)

Location	CB or Fuse		*Page Nos. of Related Systems	58	82		88	72	58	98	82 98	98	162			78 130	76 130 150	72		162	108				
			Parts	Idle Air Control Valve	Ignition Key Cylinder Light	Ignition Key Cylinder Light Relay	Light Retainer Relay	License Plate Light	Mass Air Flow	Moon Roof Control Relay	Moon Roof Control SW and Personal Light	Moon Roof Limit SW and Motor	Noise Filter (Oil Pressure Sender)	Oil Level Warning SW	Oil Pressure Sender	O/D Main SW	Park/Neutral Position SW	Parking Light LH	Parking Light RH	Parking Brake SW	Power Window Master SW	Power Window Motor Front LH	Power Window Motor Front RH	Power Window Motor Rear LH	Power Window Motor Rear RH
			Code or Location	I1	I10	I11	L1	L2	M1	M2	M3	M4	N2	O1	O2	O4	P1	P2	P3	P4	P6	P7	P8	P9	P10
①	7.5A	CHARGE																							
	15A	EFI		●					●																
	15A	HEAD (LH)																							
	15A	HEAD (RH)																							
	15A	HAZ-HORN																							
	10A	DOME			●	●					●														
	60A	ABS																							
②	15A	CIG																							
	15A	TAIL						●								●		●	●						
	10A	STOP																							
	20A	DEFOG																							
	20A	WIPER																							
	10A	GAUGE											●	●	●	●	●			●					
	7.5A	TURN																							
	15A	ECU-IG					●																		
	20A	REAR-HTR																							
	7.5A	IGN																							
	10A	A.C																							
	30A	DIFF																							
	30A	FL POWER								●	●	●									●	●	●	●	●
	40A	FL HEATER																							
	10A	ECU-B					●																		
	15A	OBD																							

* These are the page numbers of the first page on which the related system is shown.
The part indicated is located somewhere in the system, not necessarily on the page indicated here.

[LOCATION] ① : R/B No. 2 (See page 18)
② : Fuse Block (F11 See page 20)
③ : R/B No. 1 (See page 20)

Brought to you by BirfMark

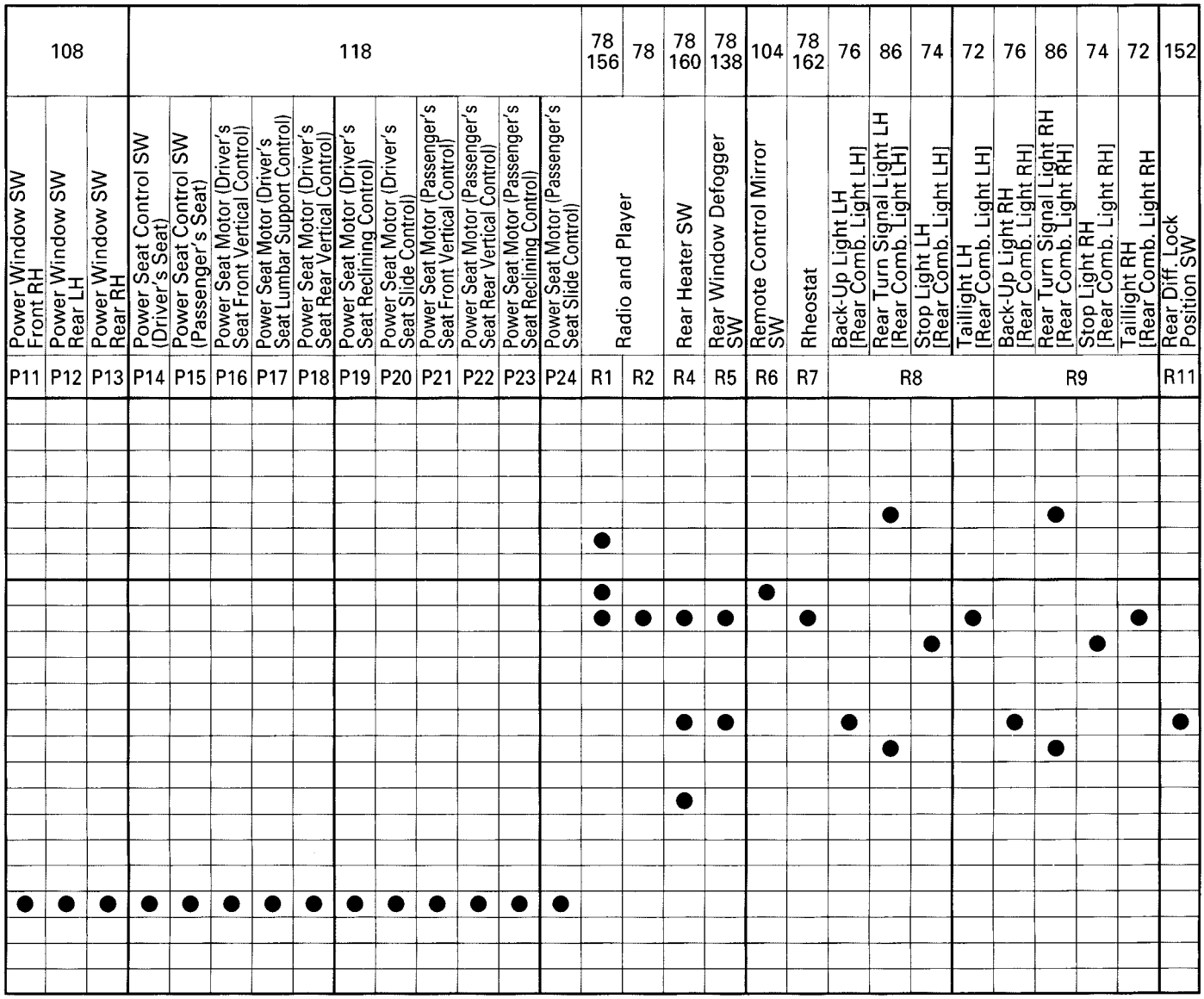
108
118
78 156
78
78 160
78 138
104
78 162
76
86
74
72
76
86
74
72
152
Power Window SW Front RH
Power Window SW Rear LH
Power Window SW Rear RH
Power Seat Control SW (Driver's Seat)
Power Seat Control SW (Passenger's Seat)
Power Seat Motor (Driver's Seat Front Vertical Control)
Power Seat Motor (Driver's Seat Lumbar Support Control)
Power Seat Motor (Driver's Seat Rear Vertical Control)
Power Seat Motor (Driver's Seat Reclining Control)
Power Seat Motor (Driver's Seat Slide Control)
Power Seat Motor (Passenger's Seat Front Vertical Control)
Power Seat Motor (Passenger's Seat Rear Vertical Control)
Power Seat Motor (Passenger's Seat Reclining Control)
Power Seat Motor (Passenger's Seat Slide Control)
Radio and Player
Rear Heater SW
Rear Window Defogger SW
Remote Control Mirror SW
Rheostat
Back-Up Light LH [Rear Comb. Light LH]
Rear Turn Signal Light LH [Rear Comb. Light LH]
Stop Light LH [Rear Comb. Light LH]
Taillight LH [Rear Comb. Light LH]
Back-Up Light RH [Rear Comb. Light RH]
Rear Turn Signal Light RH [Rear Comb. Light RH]
Stop Light RH [Rear Comb. Light RH]
Taillight RH [Rear Comb. Light RH]
Rear Diff. Lock Position SW
P11
P12
P13
P14
P15
P16
P17
P18
P19
P20
P21
P22
P23
P24
R1
R2
R4
R5
R6
R7
R8
R9
R11

Brought to you by BirfMark

H POWER SOURCE (Current Flow Chart)

Location	CB or Fuse		*Page Nos. of Related Systems	160		82	138	94		104		140	78 156	58, 74 106, 121 126, 130	106	130 150	150	72 74 76	86	162	58		82	
			Parts	Rear Heater	Rear Heater Relay	Rear Interior Light	Rear Window Defogger	Rear Wiper Motor	Rear Wiper Relay	Remote Control Mirror LH	Remote Control Mirror RH	Seat Belt Warning Relay	Stereo Component Amplifier	Stop Light SW	Shift Lock ECU	Transfer L4 Position SW	Transfer Neutral Position SW	Trailer Socket (Tail and Stop Light)	Trailer Socket (Turn Signal Light)	Vehicle Speed Sensor (Combination Meter)	VSV (EGR)	VSV (Fuel Pressure Control)	Vanity Light LH	Vanity Light RH
			Code or Location	R14	R15	R16	R17	R19	R20	R21	R22	S3	S11	S13	S14	T2	T3	T4	T5	V1	V3	V4	V6	V7
①	7.5A	CHARGE																						
	15A	EFI																			●	●		
	15A	HEAD (LH)																						
	15A	HEAD (RH)																						
	15A	HAZ-HORN																	●					
	10A	DOME				●						●	●										●	●
	60A	ABS																						
②	15A	CIG								●	●		●		●									
	15A	TAIL											●					●						
	10A	STOP												●	●			●						
	20A	DEFOG					●																	
	20A	WIPER						●	●															
	10A	GAUGE										●				●	●	●		●				
	7.5A	TURN																	●					
	15A	ECU-IG													●									
	20A	REAR-HTR		●	●																			
	7.5A	IGN																						
	10A	A.C																						
	30A	DIFF																						
	30A	FL POWER																						
	40A	FL HEATER																						
	10A	ECU-B																						
	15A	OBD																						

* These are the page numbers of the first page on which the related system is shown.
The part indicated is located somewhere in the system, not necessarily on the page indicated here.

[LOCATION] ① : R/B No. 2 (See page 18)
② : Fuse Block (F11 See page 20)
③ : R/B No. 1 (See page 20)

Brought to you by BirfMark

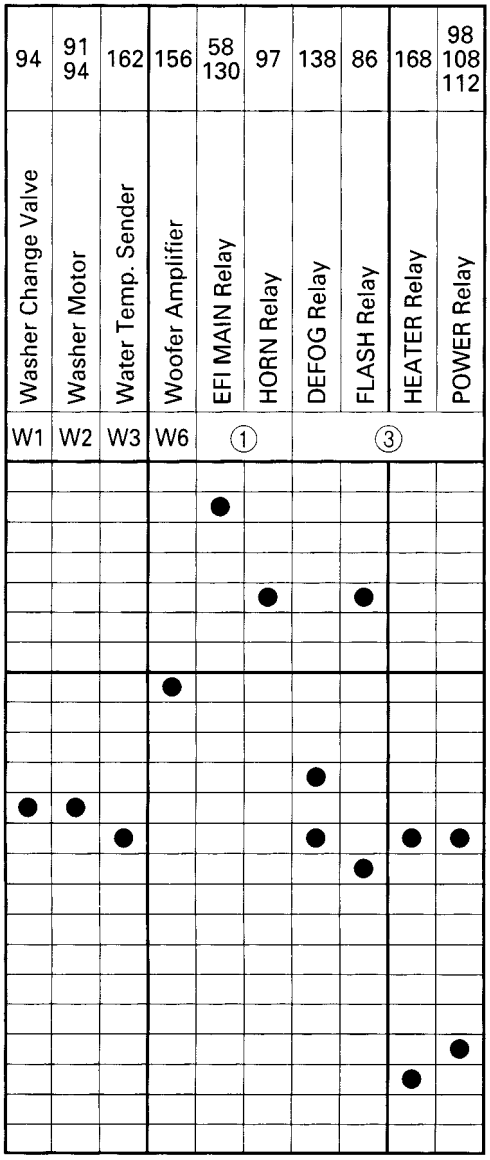
94
91
94
162
156
58
130
97
138
86
168
98
108
112
Washer Change Valve
Washer Motor
Water Temp. Sender
Woofer Amplifier
EFI MAIN Relay
HORN Relay
DEFOG Relay
FLASH Relay
HEATER Relay
POWER Relay
W1
W2
W3
W6
①
③

MEMO

Brought to you by BirfMark

Brought to you by BirfMark

PG Circuit

52 Power Source
54 Starting and Ignition
56 Charging
58 Engine Control
70 Headlight
72 Taillight
74 Stop Light
76 Back-up Light
78 Illumination
82 Interior Light
86 Turn Signal and Hazard Warning Light
88 Light Auto Turn Off
91 Front Wiper and Washer
94 Rear Wiper and Washer
97 Horn
98 Moon Roof
102 Cigarette Lighter and Clock
104 Remote Control Mirror
106 Shift Lock
108 Power Window
112 Door Lock Control
117 Auto Antenna
118 Power Seat
121 ABS
126 Cruise Control
130 Electronically Controlled Transmission and A/T Indicator
138 Rear Window Defogger
140 Unlock and Seatbelt Warning
143 SRS
150 Center Differential Lock
152 Front/Rear Differential Lock
156 Radio and Player
160 Rear Heater
162 Combination Meter
168 Air Conditioning

Brought to you by BirfMark

POWER SOURCE

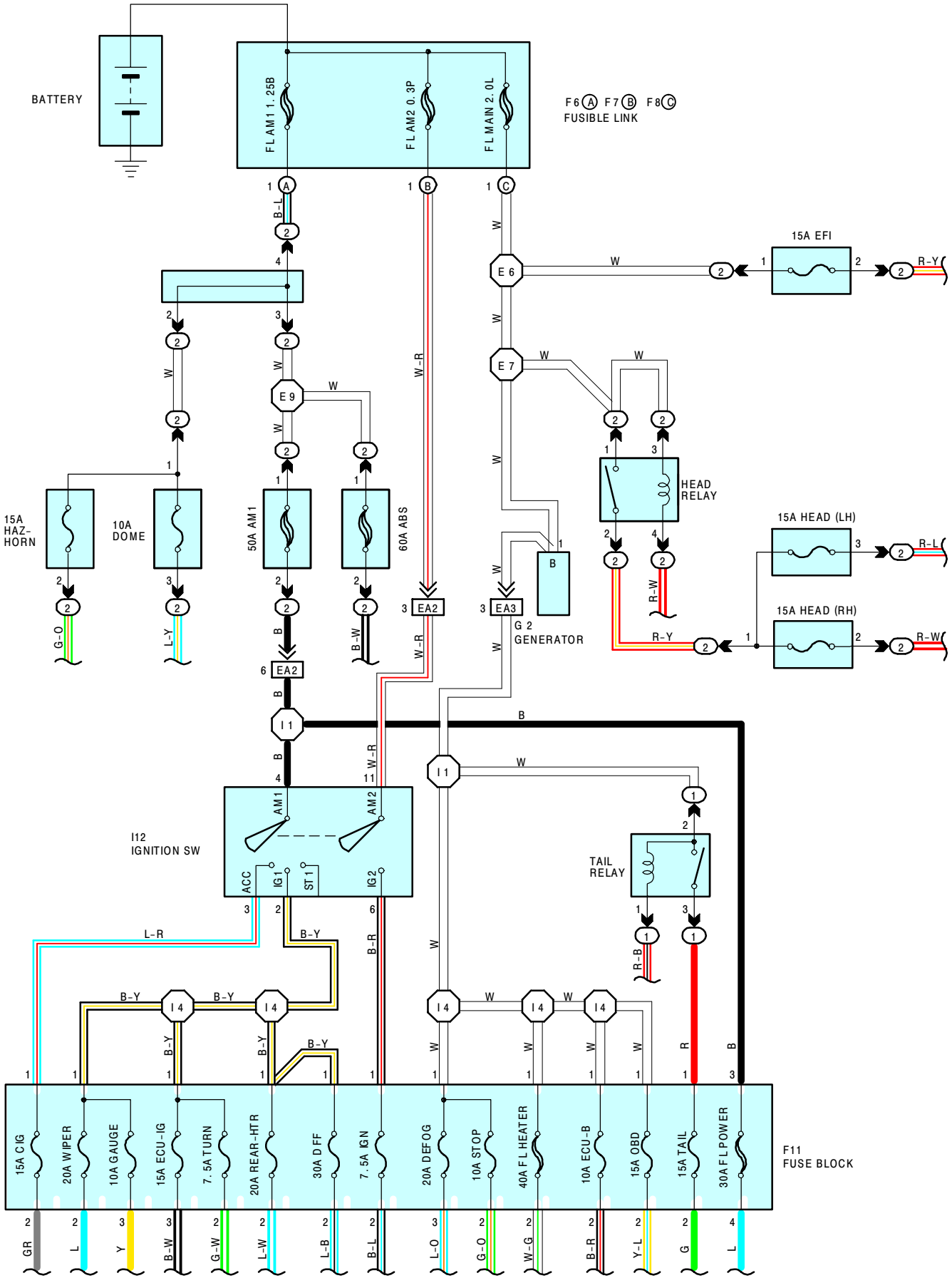

SERVICE HINTS

HEAD RELAY

(2) 1- **(2)** 2 : CLOSED WITH THE LIGHT CONTROL SW AT **HEAD** POSITION OR THE DIMMER SW AT **FLASH** POSITION (WHEN THE LIGHT AUTO TURN OFF SYSTEM DOES NOT OPERATE)

I12 IGNITION SW

4-3 : CLOSED WITH THE IGNITION SW AT **ACC** OR **ON** POSITION

4-2 : CLOSED WITH THE IGNITION SW AT **ON** OR **ST POSITION**

11-6 : CLOSED WITH THE IGNITION SW AT **ON** OR **ST** POSITION

TAIL RELAY

(1) 2- **(1)** 3 : CLOSED WITH THE LIGHT CONTROL SW AT **TAIL** OR **HEAD** POSITION (WHEN THE LIGHT AUTO TURN OFF SYSTEM DOES NOT OPERATE)

: PARTS LOCATION

CODE		SEE PAGE	CODE		SEE PAGE	CODE	SEE PAGE
F 6	A	22	**F 8**	C	22	**G 2**	22
F 7	B	22	**F11**		25	**I12**	25

: RELAY BLOCKS

CODE	SEE PAGE	RELAY BLOCKS (RELAY BLOCK LOCATION)
1	20	R/B NO. 1 (LEFT KICK PANEL)
2	18	R/B NO. 2 (FRONT SIDE OF LEFT FENDER)

: CONNECTOR JOINING WIRE HARNESS AND WIRE HARNESS

CODE	SEE PAGE	JOINING WIRE HARNESS AND WIRE HARNESS (CONNECTOR LOCATION)
EA2	30	COWL WIRE AND ENGINE ROOM MAIN WIRE (LEFT FENDER)
EA3		

: SPLICE POINTS

CODE	SEE PAGE	WIRE HARNESS WITH SPLICE POINTS	CODE	SEE PAGE	WIRE HARNESS WITH SPLICE POINTS
E 6	30	ENGINE ROOM MAIN WIRE	**I 1**	32	COWL WIRE
E 7			**I 4**		
E 9					

F 6 (A) (B) (C)

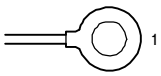

F 7 (B) GRAY

F11

(SEE PAGE 20)

G 2

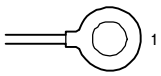

I12 BLACK

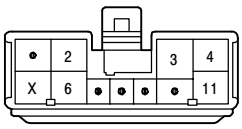

STARTING AND IGNITION

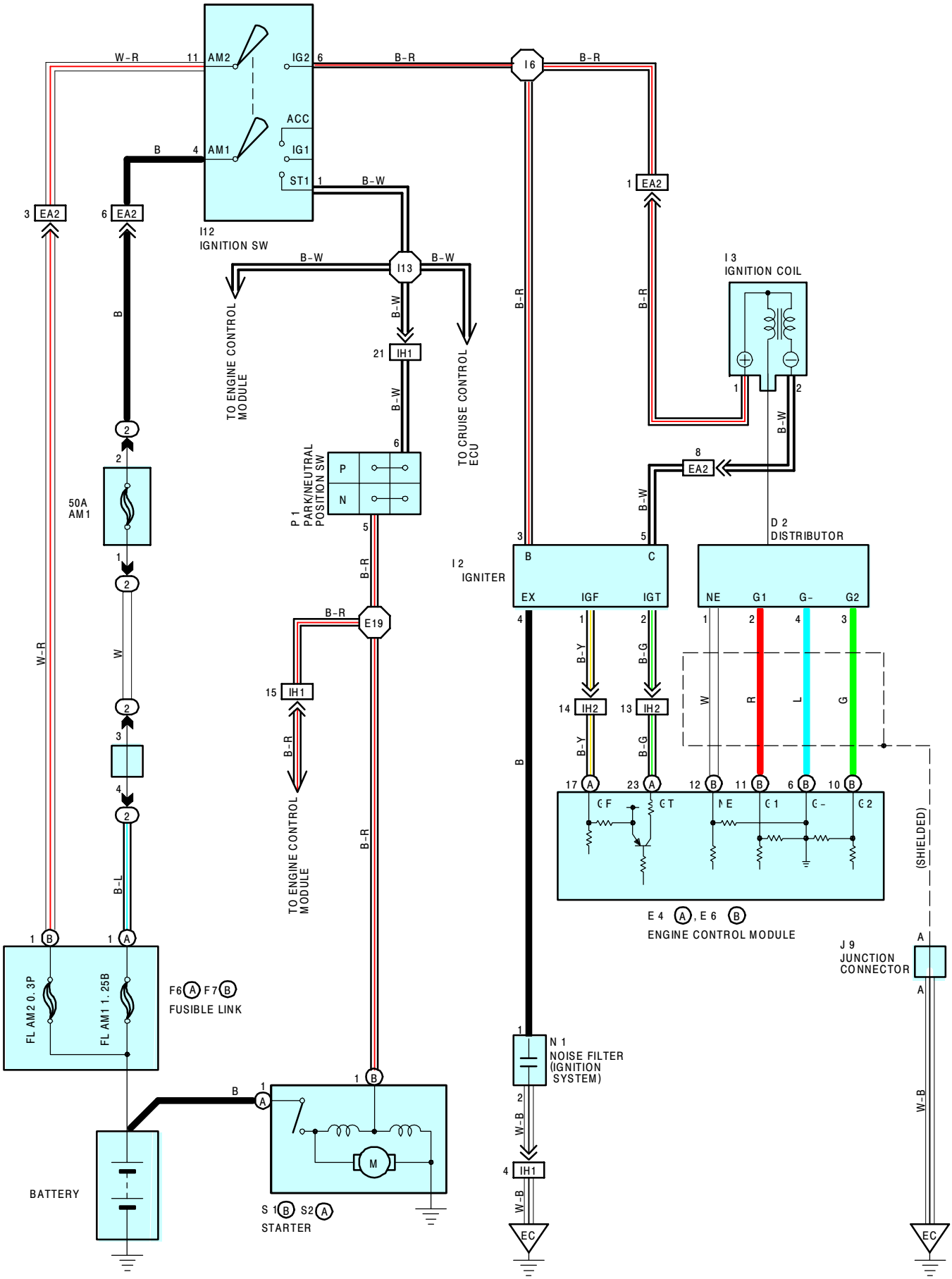

SERVICE HINTS

I12 IGNITION SW
4-1 : CLOSED WITH THE IGNITION SW AT **ST** POSITION
11-6 : CLOSED WITH THE IGNITION SW AT **ON** OR **ST** POSITION

S 1 (B), S 2 (A) STARTER
POINTS CLOSED WITH THE PARK/NEUTRAL POSITION SW AT **P** OR **N** POSITION AND THE IGNITION SW AT **ST** POSITION

P 1 PARK/NEUTRAL POSITION SW
6-5 : CLOSED WITH THE A/T SHIFT LEVER IN **P** OR **N** POSITION

: PARTS LOCATION

CODE		SEE PAGE	CODE	SEE PAGE	CODE		SEE PAGE
D 2		22	**I 2**	23	**P 1**		23
E 4	A	24	**I 3**	23	**S 1**	B	23
E 6	B	24	**I12**	25	**S 2**	A	23
F 6	A	22	**J 9**	25			
F 7	B	22	**N 1**	23			

: RELAY BLOCKS

CODE	SEE PAGE	RELAY BLOCKS (RELAY BLOCK LOCATION)
2	18	R/B NO. 2 (FRONT SIDE OF LEFT FENDER)

: CONNECTOR JOINING WIRE HARNESS AND WIRE HARNESS

CODE	SEE PAGE	JOINING WIRE HARNESS AND WIRE HARNESS (CONNECTOR LOCATION)
EA2	30	COWL WIRE AND ENGINE ROOM MAIN WIRE (LEFT FENDER)
IH1	32	ENGINE WIRE AND COWL WIRE (BEHIND GLOVE BOX)
1H2		

: GROUND POINTS

CODE	SEE PAGE	GROUND POINTS LOCATION
EC	30	AIR INTAKE CHAMBER

: SPLICE POINTS

CODE	SEE PAGE	WIRE HARNESS WITH SPLICE POINTS	CODE	SEE PAGE	WIRE HARNESS WITH SPLICE POINTS
E19	30	ENGINE WIRE	**I13**	32	COWL WIRE
I 6	32	COWL WIRE			

D 2 BLACK

E 4 (A) DARK GRAY

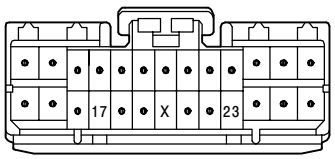

E 6 (B) DARK GRAY

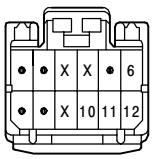

F 6 (A)

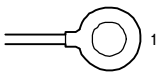

F 7 (B) GRAY

I 2 DARK GRAY

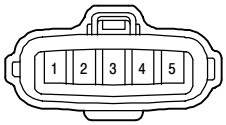

I 3 BLACK

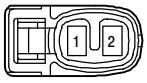

I12 BLACK

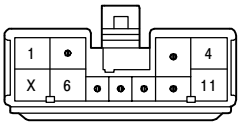

J 9

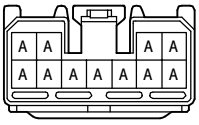

(HINT : SEE PAGE 7)

N 1 GRAY

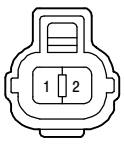

P 1 GRAY

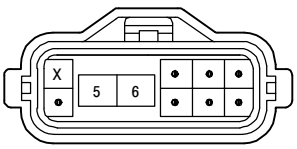

S 1 (B) BLACK

S 2 (A)

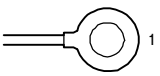

CHARGING

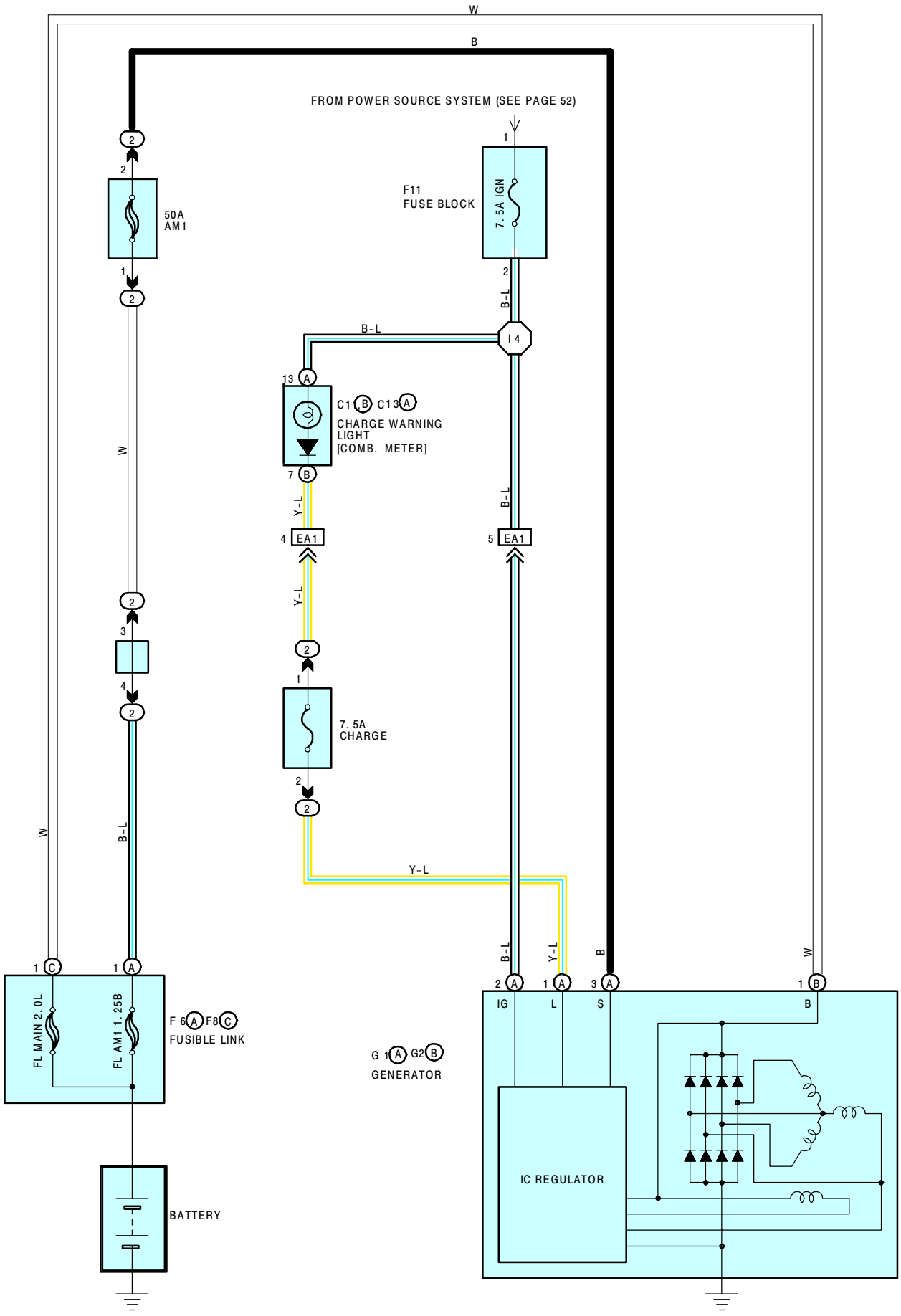
W
B
FROM POWER SOURCE SYSTEM (SEE PAGE 52)
F11
FUSE BLOCK
7.5A IGN
50A
AM1
B-L
I4
C1 B C13 A
CHARGE WARNING
LIGHT
[COMB. METER]
Y-L
EA1
7.5A
CHARGE
W
B-L
Y-L
FL MAIN 2.0L
FL AM1 1.25B
F6 A F8 C
FUSIBLE LINK
G1 A G2 B
GENERATOR
IG
L
S
B
IC REGULATOR
BATTERY

SERVICE HINTS

G 1 (A), G 2 (B) GENERATOR

(B) 1-GROUND : **13.9-15.1** VOLTS WITH THE ENGINE RUNNING AT **2000** RPM AND **25**°C (**77**°F)
13.5-14.3 VOLTS WITH THE ENGINE RUNNING AT **2000** RPM AND **115**°C (**239**°F)

(A) 3-GROUND : **0-4** VOLTS WITH THE IGNITION SW AT **ON** POSITION AND ENGINE NOT RUNNING

: PARTS LOCATION

CODE		SEE PAGE	CODE		SEE PAGE	CODE		SEE PAGE
C11	B	24	**F 8**	C	22	**G 2**	B	22
C13	A	24	**F11**		25			
F 6	A	22	**G 1**	A	22			

: RELAY BLOCKS

CODE	SEE PAGE	RELAY BLOCKS (RELAY BLOCK LOCATION)
2	18	R/B NO. 2 (FRONT SIDE OF LEFT FENDER)

: CONNECTOR JOINING WIRE HARNESS AND WIRE HARNESS

CODE	SEE PAGE	JOINING WIRE HARNESS AND WIRE HARNESS (CONNECTOR LOCATION)
EA1	30	COWL WIRE AND ENGINE ROOM MAIN WIRE (LEFT FENDER)

: SPLICE POINTS

CODE	SEE PAGE	WIRE HARNESS WITH SPLICE POINTS	CODE	SEE PAGE	WIRE HARNESS WITH SPLICE POINTS
I 4	32	COWL WIRE			

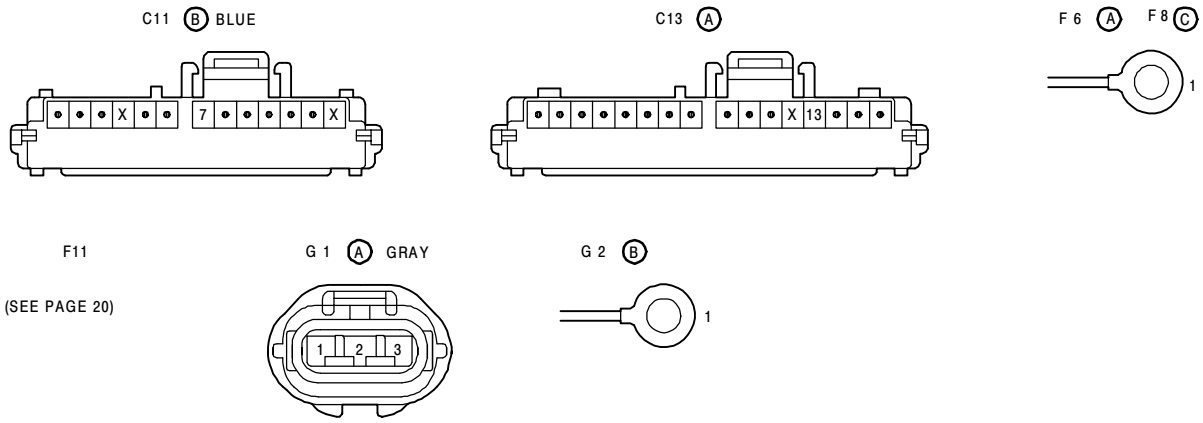

Brought to you by BirfMark

SYSTEM OUTLINE

THE ENGINE CONTROL SYSTEM UTILIZES A MICROCOMPUTER AND MAINTAINS OVERALL CONTROL OF THE ENGINE, ETC. AN OUTLINE OF THE ENGINE CONTROL IS GIVEN HERE.

1. INPUT SIGNALS

(1) ENGINE COOLANT TEMP. SIGNAL CIRCUIT

THE ENGINE COOLANT TEMP. SENSOR DETECTS THE ENGINE COOLANT TEMP. AND HAS A BUILT-IN THERMISTOR WITH A RESISTANCE WHICH VARIES ACCORDING TO THE WATER TEMP. IS INPUT INTO **TERMINAL THW** OF THE ENGINE CONTROL MODULE AS A CONTROL SIGNAL.

(2) INTAKE AIR TEMP. SIGNAL CIRCUIT

THE INTAKE AIR TEMP. SENSOR IS INSTALLED IN THE MASS AIR FLOW AND DETECTS THE INTAKE AIR TEMP. WHICH IS INPUT AS A CONTROL SIGNAL TO **TERMINAL THA** OF THE ENGINE CONTROL MODULE.

(3) OXYGEN DENSITY SIGNAL CIRCUIT

THE OXYGEN DENSITY IN THE EXHAUST EMISSION IS DETECTED AND INPUT AS A CONTROL SIGNAL FROM THE HEATED OXYGEN SENSOR (BANK 1 SENSOR 1, BANK 1 SENSOR 2) TO **TERMINALS OX1**, **OX2** OF THE ENGINE CONTROL MODULE.

TO STABILIZE DETECTION PERFORMANCE BY THE HEATED OXYGEN SENSOR IS WARMED.

(4) RPM SIGNAL CIRCUIT

CRANKSHAFT POSITION IS DETECTED BY THE CRANKSHAFT POSITION SENSOR AND THE PICK-UP COIL INSTALLED INSIDE THE DISTRIBUTOR. CRANKSHAFT POSITION IS INPUT AS A CONTROL SIGNAL TO **TERMINAL NE2+** OF THE ENGINE CONTROL MODULE, AND ENGINE SPEED IS INPUT TO **TERMINAL NE**.

(5) THROTTLE POSITION SIGNAL CIRCUIT

THE THROTTLE POSITION SENSOR DETECTS THE THROTTLE VALVE OPENING ANGLE AS A CONTROL SIGNAL WHICH IS INPUT INTO **TERMINAL VTA** OF THE ENGINE CONTROL MODULE. WHEN THE VALVE IS COMPLETELY CLOSED, THE ENGINE IDLING SIGNAL IS INPUT INTO **TERMINAL IDL**.

(6) VEHICLE SPEED CIRCUIT

THE VEHICLE SPEED IS DETECTED BY VEHICLE SPEED SENSOR INSTALLED IN THE TRANSMISSION, AND THE SIGNAL IS INPUT TO **TERMINAL SPD** OF THE ENGINE CONTROL MODULE VIA THE COMBINATION METER.

(7) NEUTRAL POSITION SIGNAL CIRCUIT

THE PARK/NEUTRAL POSITION SW DETECTS WHETHER THE SHIFT POSITION IS IN “N” AND “P” OR NOT, AND THE SIGNAL IS INPUT INTO **TERMINAL STA** OF THE ENGINE CONTROL MODULE.

(8) A/C SW SIGNAL CIRCUIT

THE OPERATING VOLTAGE OF THE A/C MAGNETIC CLUTCH IS DETECTED, AND THE SIGNAL IS INPUT INTO **TERMINAL A/C** OF THE ENGINE CONTROL MODULE AS A CONTROL SIGNAL.

(9) BATTERY SIGNAL CIRCUIT

VOLTAGE IS CONSTANTLY APPLIED TO **TERMINAL BATT** OF THE ENGINE CONTROL MODULE. WITH THE IGNITION SW TURNED ON, THE VOLTAGE FOR ENGINE CONTROL MODULE START-UP POWER SUPPLY IS APPLIED TO **TERMINAL +B** OF THE ENGINE CONTROL MODULE VIA THW EFI MAIN RELAY.

THE CURRENT FLOW THROUGH THE **IGN** FUSE FLOWS TO **TERMINAL IGSW** OF THE ENGINE CONTROL MODULE**.**

(10) INTAKE AIR VOLUME SIGNAL CIRCUIT

INTAKE AIR VOLUME IS DETECTED BY THE MASS AIR FLOW, AND THE SIGNAL IS INPUT TO **TERMINAL VG** OF THE ENGINE CONTROL MODULE AS A CONTROL SIGNAL.

(11) STOP LIGHT SW SIGNAL CIRCUIT

THE STOP LIGHT SW IS USED TO DETECT WHETHER THE VEHICLE IS BRAKING OR NOT, AND THE SIGNAL IS INPUT INTO **TERMINAL STP** OF THE ENGINE CONTROL MODULE AS A CONTROL SIGNAL.

(12) STARTER SIGNAL CIRCUIT

TO CONFIRM WHETHER THE ENGINE IS CRANKING, THE VOLTAGE IS APPLIED TO THE STARTER MOTOR DURING CRANKING IS DETECTED AND THE SIGNAL IS INPUT INTO **TERMINAL NSW** OF THE ENGINE CONTROL MODULE AS A CONTROL SIGNAL.

(13) ENGINE KNOCK SIGNAL CIRCUIT

ENGINE KNOCKING IS DETECTED BY THE KNOCK SENSOR 1 AND 2, AND THE SIGNAL IS INPUT INTO **TERMINALS KNK1** AND **KNK2** AS A CONTROL SIGNAL.

Brought to you by BirfMark

2. CONTROL SYSTEM

* SFI SYSTEM

THE SFI SYSTEM MONITORS THE ENGINE CONDITION THROUGH THE SIGNALS INPUT FROM EACH SENSOR (INPUT SIGNALS FROM (1) TO (13) ETC.) TO THE ENGINE CONTROL MODULE. THE BEST FUEL INJECTION TIMING IS DECIDED BASED ON THIS DATA AND THE PROGRAM MEMORIZED BY THE ENGINE CONTROL MODULE, AND THE CONTROL SIGNAL IS OUTPUT TO **TERMINALS #10, #20, #30, #40, #50** AND **#60** OF THE ENGINE CONTROL MODULE TO OPERATE THE INJECTOR. (INJECT THE FUEL). THE SFI SYSTEM PRODUCES CONTROL OF FUEL INJECTION OPERATION BY THE ENGINE CONTROL MODULE IN RESPONSE TO THE DRIVING CONDITIONS.

* ESA SYSTEM

THE ESA SYSTEM MONITORS THE ENGINE CONDITION THROUGH THE SIGNALS INPUT TO THE ENGINE CONTROL MODULE FROM EACH SENSOR (INPUT SIGNALS FROM (1), (2), (4) TO (13) ETC.). THE BEST IGNITION TIMING IS DECIDED ACCORDING TO THIS DATA AND THE MEMORIZED DATA IN THE ENGINE CONTROL MODULE, AND THE CONTROL SIGNAL IS OUTPUT TO **TERMINAL IGT** THIS SIGNAL, WHICH CONTROLS THE IGNITER TO PROVIDE THE BEST IGNITION TIMING FOR THE DRIVING CONDITIONS.

* HEATED OXYGEN SENSOR HEATER CONTROL SYSTEM

THE HEATED OXYGEN SENSOR HEATER CONTROL SYSTEM TURNS THE HEATER ON WHEN THE INTAKE AIR VOLUME IS LOW (TEMP. OF EXHAUST EMISSIONS IS LOW), AND WARMS UP THE OXYGEN SENSOR TO IMPROVE DETECTION PERFORMANCE OF THE SENSOR. THE ENGINE CONTROL MODULE EVALUATES THE SIGNALS FROM EACH SENSOR (INPUT SIGNALS FROM (1), (2), (4), (9) TO (11) ETC.), AND OUTPUTS CURRENT TO **TERMINALS HT AND HT2** TO CONTROL THE HEATER.

* IDLE AIR CONTROL SYSTEM

THE IDLE AIR CONTROL SYSTEM (STEP MOTOR TYPE) INCREASES THE ENGINE SPEED AND PROVIDES IDLING STABILITY FOR FAST IDLE-UP WHEN THE ENGINE IS COLD AND WHEN THE IDLE SPEED HAS DROPPED DUE TO ELECTRICAL LOAD AND SO ON. THE ENGINE CONTROL MODULE EVALUATES THE SIGNALS FROM EACH SENSOR (INPUT SIGNALS FROM (1), (4), (5), (8), (9), (11) ETC.) AND OUTPUTS CURRENT TO **TERMINAL ISC1, ISC2, ISC3** AND **ISC4** TO CONTROL THE IDLE AIR CONTROL VALVE.

* EGR CUT CONTROL SYSTEM

THE EGR CUT CONTROL SYSTEM CONTROLS THE VSV (EGR) BY EVALUATING THE SIGNAL FROM EACH SENSOR (INPUT SIGNALS FROM (1), (5), (9)), AND OUTPUTS CURRENT TO **TERMINAL EGR** OF THE ENGINE CONTROL MODULE.

* FUEL PUMP CONTROL SYSTEM

THE ENGINE CONTROL MODULE OOPERATION OUTPUTS TO **TERMINAL FPR** AND CONTROLS THE FUEL PUMP RELAY AND THUS CONTROLS THE FUEL PUMP DRIVE SPEED IN RESPONSE TO CONDITIONS.

* FUEL PRESSURE CONTROL SYSTEM

THE FUEL PRESSURE UP SYSTEM CAUSES THE VSV (FUEL PRESSURE CONTROL) TO COME ON FOR HIGH TEMP. STARTS AND IMMEDIATELY AFTER STARTING IN ORDER TO INCREASE THE FUEL PRESSURE, IMPROVE STARTABILITY AT HIGH TEMPERATURES AND PROVIDE STABLE IDLING. THE ENGINE CONTROL MODULE EVALUATES THE SIGNALS FROM EACH SENSOR (INPUT SIGNALS FROM (1), (2), (5), (11)), OUTPUTS CURRENT TO **TERMINAL FPU** AND CONTROLS THE VSV.

3. DIAGNOSIS SYSTEM

WITH THE DIAGNOSIS SYSTEM, WHEN THERE IS A MALFUNCTION IN THE ENGINE CONTROL MODULE SIGNAL SYSTEM, THE MALFUNCTIONING SYSTEM IS RECORDED IN THE MEMORY. THE MALFUNCTIONING SYSTEM CAN BE FOUND BY READING THE CODE DISPLAYED BY THE MALFUNCTION INDICATOR LAMP.

4. FAIL -SAFE SYSTEM

WHEN THE MALFUNCTION HAS OCCURRED IN ANY SYSTEM, IF THERE IS A POSSIBILITY OF ENGINE TROUBLE BEING CAUSED BY CONTINUED CONTROL BASED ON THE SIGNALS FROM THAT SYSTEM, THE FAIL-SAFE SYSTEM EITHER CONTROLS THE SYSTEM BY USING DATA (STANDARD VALUES) RECORDED IN THE ENGINE CONTROL MODULE MEMORY OR ELSE STOPS THE ENGINE.

ENGINE CONTROL

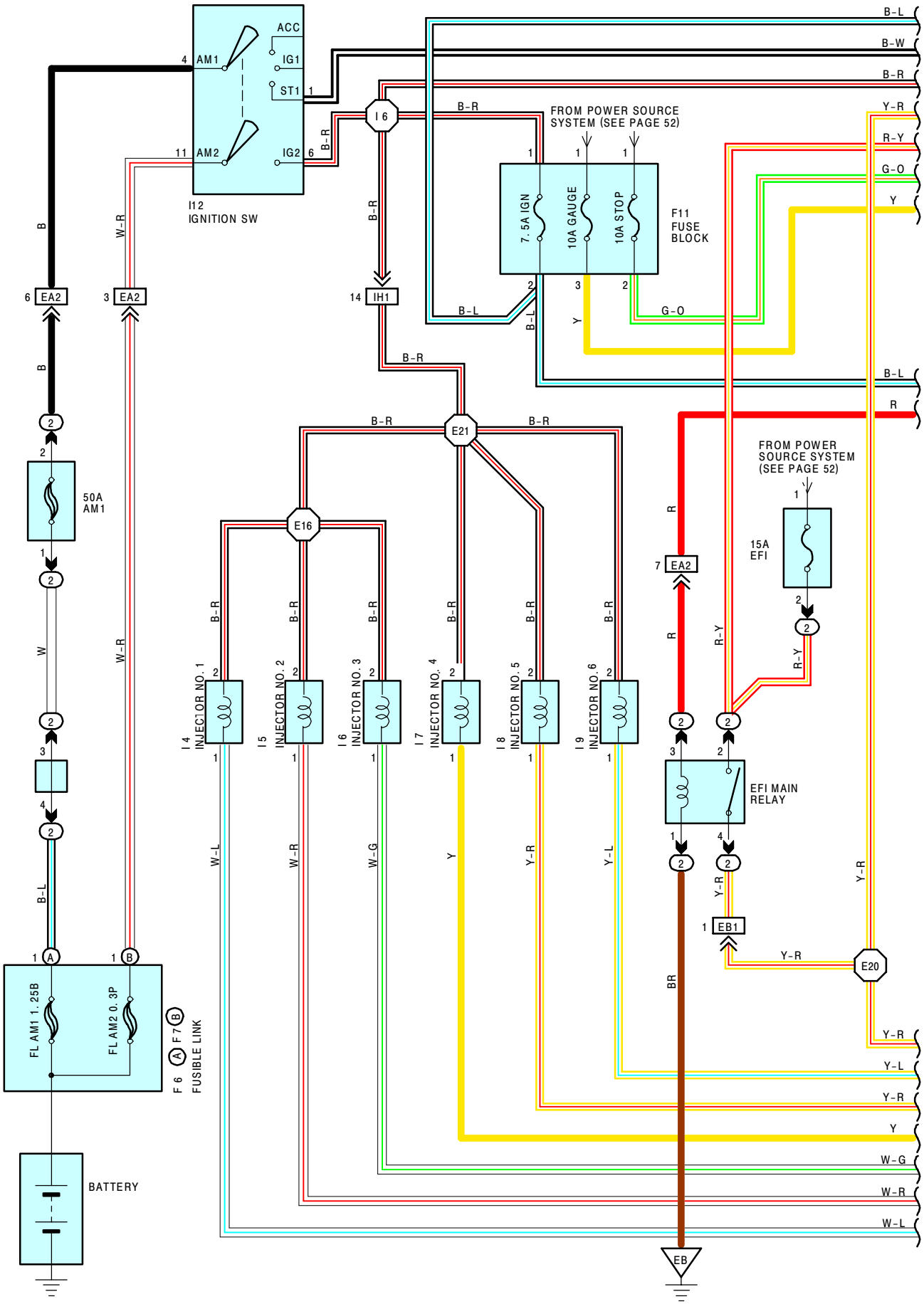

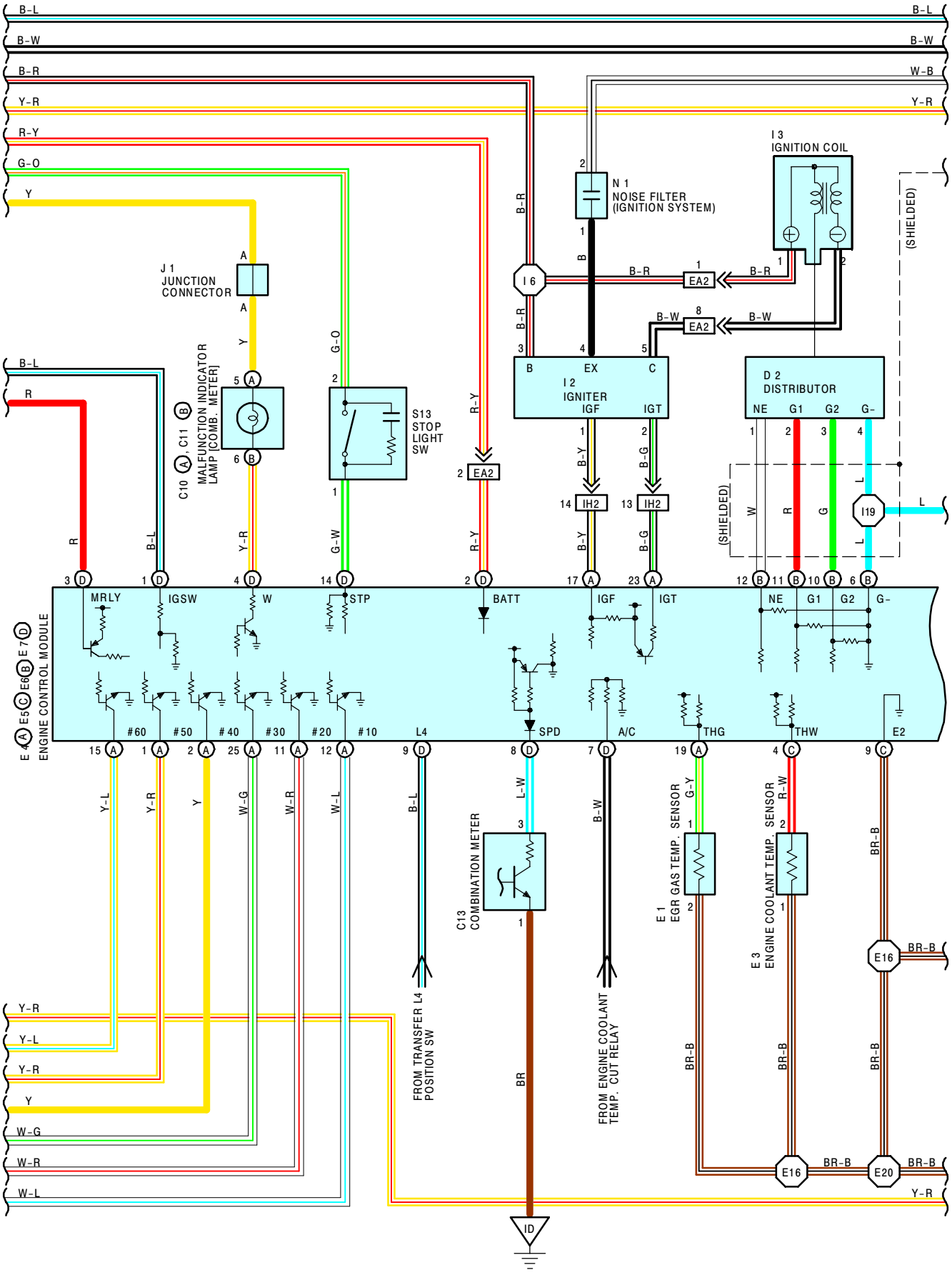
B-L
B-W
B-R
Y-R
R-Y
G-O
Y
W-B
J 1
JUNCTION
CONNECTOR
MALFUNCTION INDICATOR
LAMP [COMB. METER]
C10 A, C11 B
S13
STOP
LIGHT
SW
N 1
NOISE FILTER
(IGNITION SYSTEM)
I 3
IGNITION COIL
(SHIELDED)
I 6
EA2
I 2
IGNITER
IGF
IGT
EX
IH2
D 2
DISTRIBUTOR
NE
G1
G2
G-
I19
ENGINE CONTROL MODULE
E 4 E 5 E6 E 7
MRLY
IGSW
W
STP
BATT
SPD
A/C
THG
THW
E2
#60
#50
#40
#30
#20
#10
L4
C13
COMBINATION METER
E 1
EGR GAS TEMP. SENSOR
E 3
ENGINE COOLANT TEMP. SENSOR
E16
E20
FROM TRANSFER L4
POSITION SW
FROM ENGINE COOLANT
TEMP. CUT RELAY
ID
BR
BR-B
L-W
G-Y
R-W

ENGINE CONTROL

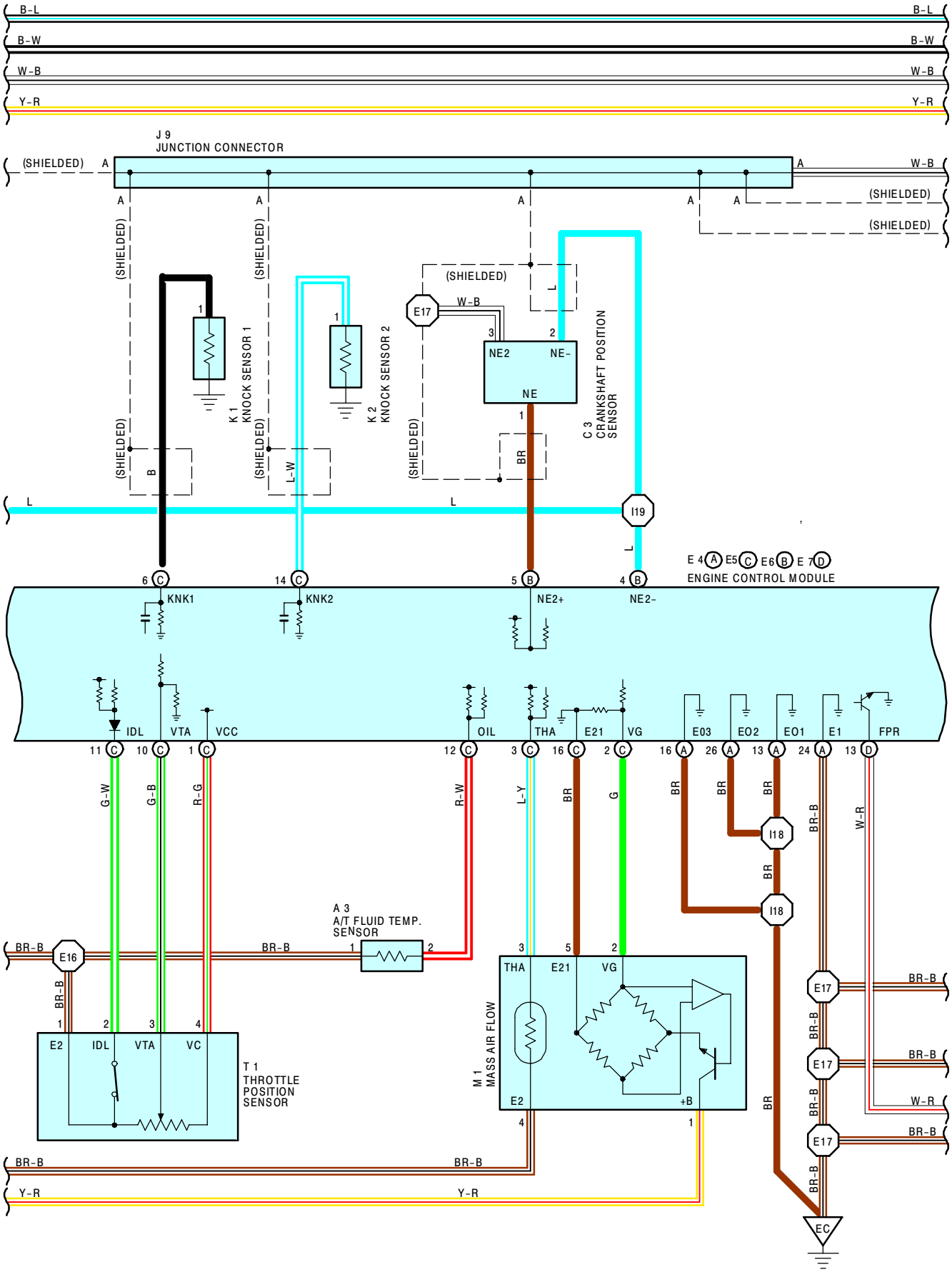

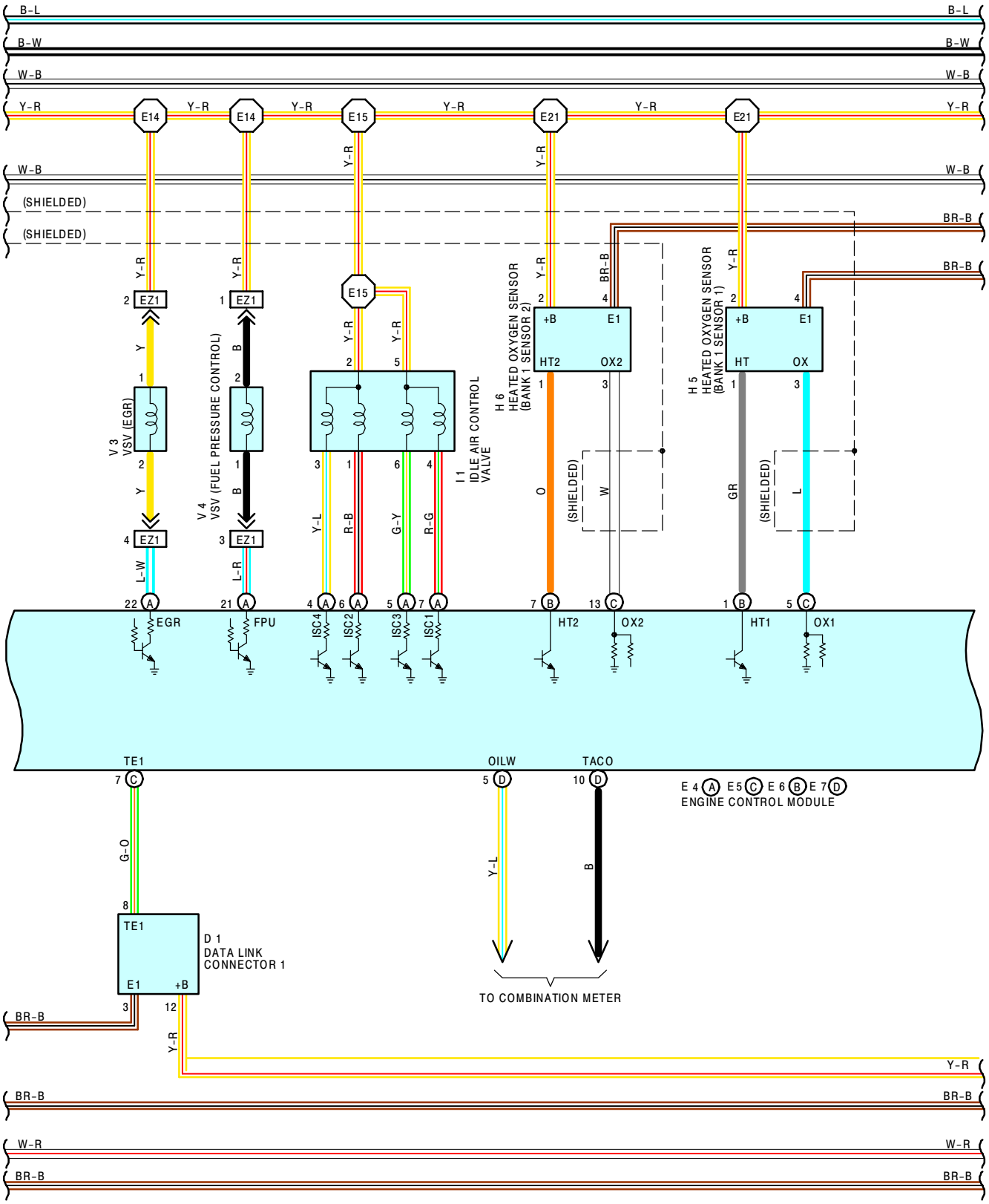
B-L
B-W
W-B
Y-R
E14
E15
E21
(SHIELDED)
BR-B
W-R
EZ1
V 3
VSV (EGR)
V 4
VSV (FUEL PRESSURE CONTROL)
I 1
IDLE AIR CONTROL VALVE
H 6
HEATED OXYGEN SENSOR (BANK 1 SENSOR 2)
H 5
HEATED OXYGEN SENSOR (BANK 1 SENSOR 1)
+B
E1
HT2
OX2
HT
OX
L-W
L-R
Y-L
R-B
G-Y
R-G
O
W
GR
L
EGR
FPU
ISC4
ISC2
ISC3
ISC1
HT1
OX1
TE1
G-O
D 1
DATA LINK CONNECTOR 1
OILW
TACO
B
TO COMBINATION METER
E 4 A E 5 C E 6 B E 7 D
ENGINE CONTROL MODULE

ENGINE CONTROL

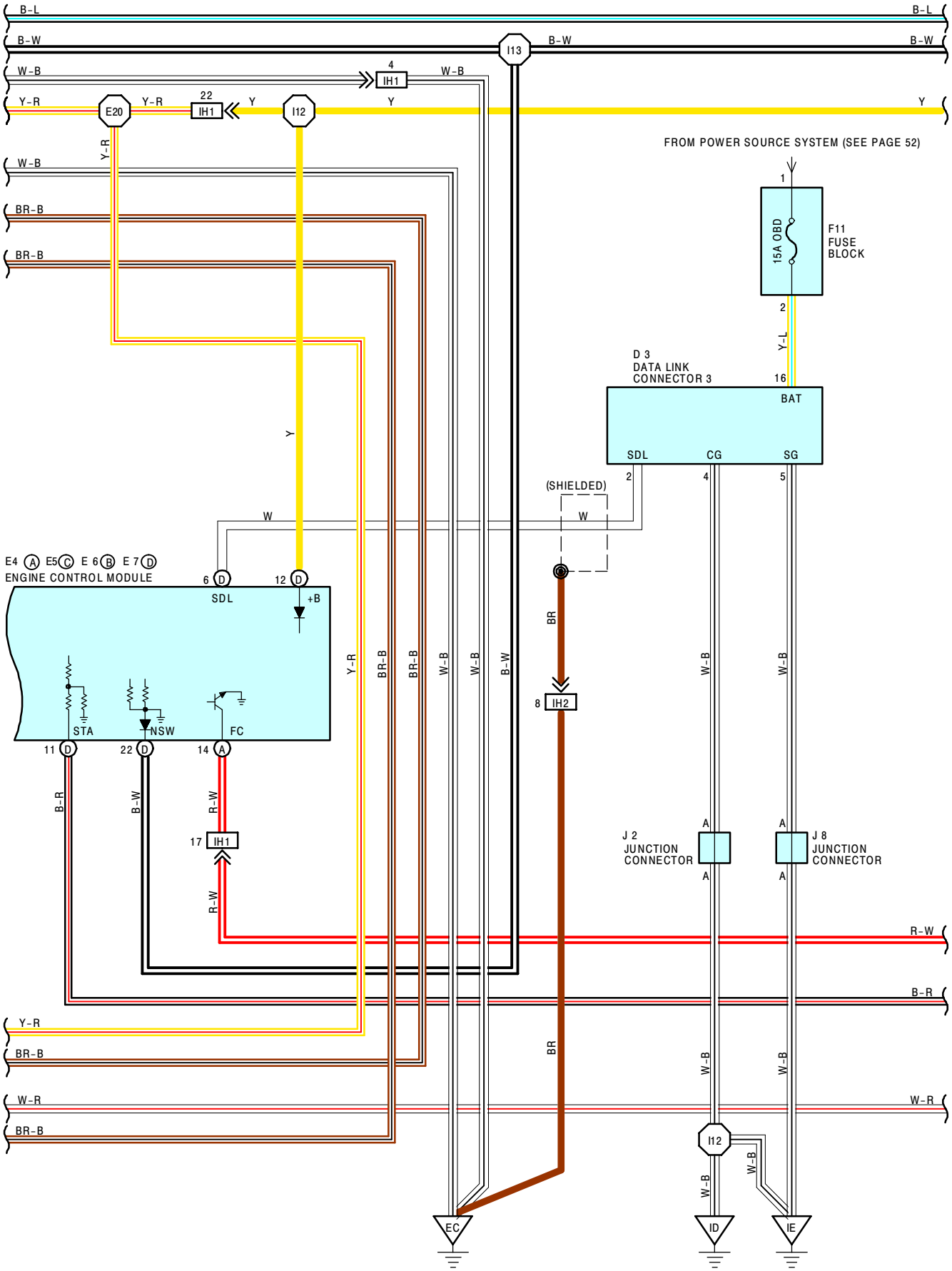

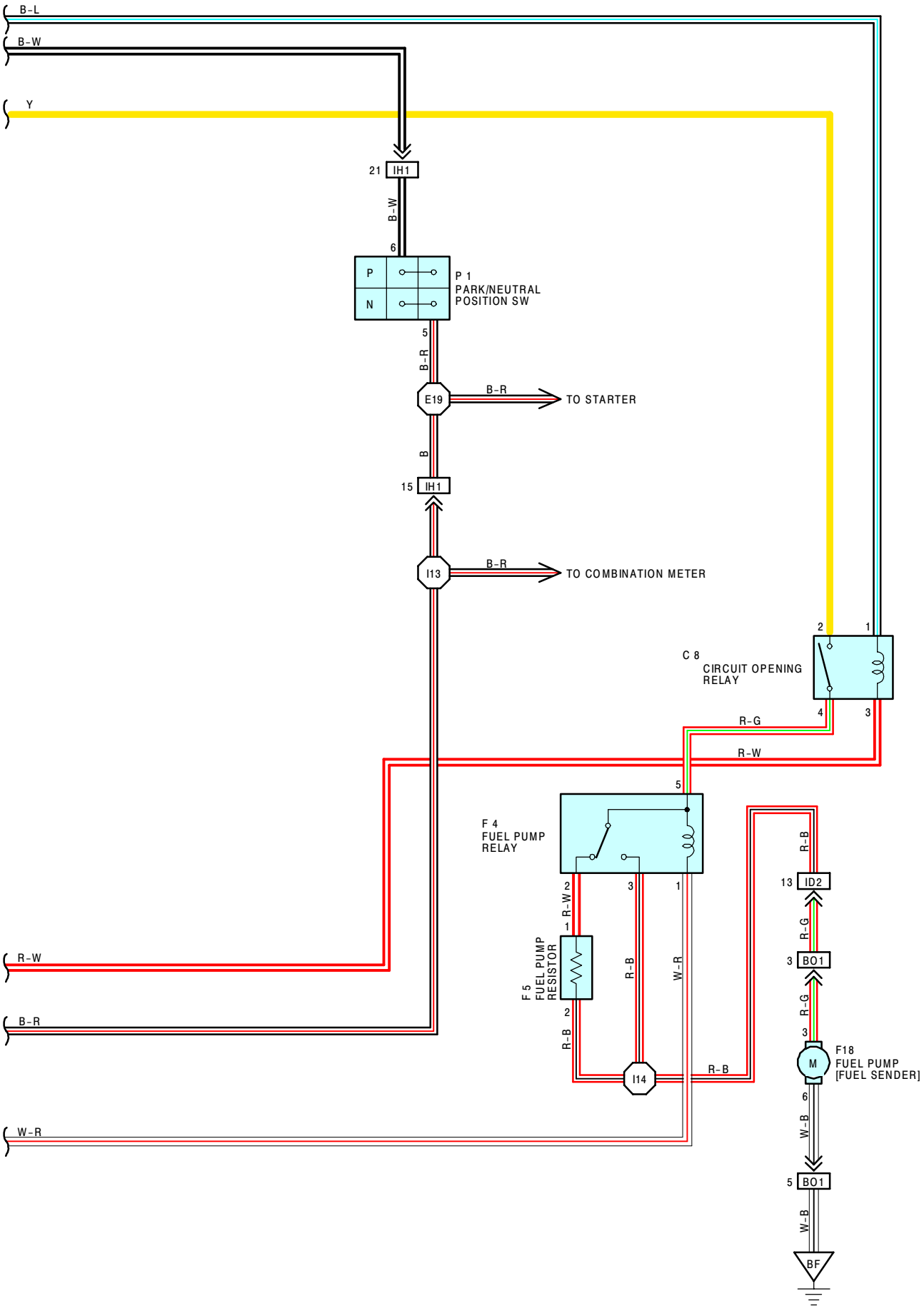
B-L
B-W
Y
21 IH1
B-W
6
P
N
P 1
PARK/NEUTRAL
POSITION SW
5
B-R
E19
B-R
TO STARTER
B
15 IH1
I13
B-R
TO COMBINATION METER
2
1
C 8
CIRCUIT OPENING
RELAY
4
3
R-G
R-W
5
F 4
FUEL PUMP
RELAY
2
3
1
R-W
1
F 5
FUEL PUMP
RESISTOR
2
R-B
R-B
W-R
I14
R-B
R-B
13 ID2
R-G
3 BO1
R-G
3
F18
FUEL PUMP
[FUEL SENDER]
M
6
W-B
5 BO1
W-B
BF
R-W
B-R
W-R

ENGINE CONTROL

SERVICE HINTS

EFI MAIN RELAY

(2) 2- (2) 4:CLOSED WITH THE IGNITION SW AT **ON** OR **ST** POSITION

E 4 (A), E 5 (C), E 6 (B), E 7 (D) ENGINE CONTROL MODULE

(VOLTAGE AT THE ENGINE CONTROL MODULE)

BATT -E1 : ALWAYS **9.0-14.0** VOLTS
IGSW, +B, MRLY-E1 : **9.0-14.0** VOLTS WITH THE IGNITION SW ON
VCC -E2 : **4.5-5.5** VOLTS WITH THE IGNITION SW ON
IDL -E2 : **0-3.0** VOLTS WITH THE IGNITION SW ON AND THROTTLE VALVE FULLY CLOSED
: **9.0-14.0** VOLTS WITH THE IGNITION SW ON AND THROTTLE VALVE FULLY OPEN
VTA -E2 : **0.3-0.8** VOLTS WITH THE IGNITION SW ON AND THROTTLE VALVE FULLY CLOSED
: **3.2-4.9** VOLTS WITH THE IGNITION SW ON AND THROTTLE VALVE FULLY OPEN
THA -E2 : **0.5-3.4** VOLTS WITH THE IGNITION SW ON AND INTAKE AIR TEMP. **20**°C (**68**°F)
THW -E2 : **0.2-1.0** VOLTS WITH THE IGNITION SW ON AND ENGINE COOLANT TEMP. **80**°C **(176**°F)
STA -E1 : **6.0** VOLTS OR MORE WITH THE CLANKING
IGT -E1 : PULSE GENERATION WITH THE ENGINE IDLING
#10, #20, #30-EO1, EO2 : **9.0-14.0** VOLTS WITH THE IGNITION SW ON
#40, #50, #60-EO1, EO2 : **9.0-14.0** VOLTS WITH THE IGNITION SW ON
IGF -E1 : **2.0** VOLTS OR LESS WITH THE IGNITION SW ON
: PULSE GENERATION WITH THE ENGINE IDLING
G1, G2-G- : PULSE GENERATION WITH THE ENGINE IDLING
NE- G- : PULSE GENERATION WITH THE ENGINE IDLING
KNK1, KNK2-E1 : PULSE GENERATION WITH THE ENGINE IDLING
ISC1, ISC2, ISC3, ISC4-E1 : **9.0-14.0** VOLTS WITH THE IGNITION SW ON
STA -E1 : **9.0-14.0** VOLTS OR LESS WITH THE IGNITION SW ON AND PARK/NEUTRAL POSITION SW AT **"P"** OR **"N"** POSITION
: **3.0** VOLTS WITH THE IGNITION SW ON AND PARK/NEUTRAL POSITION SW AT OTHER THAN **"P "** OR **"N"** POSITION
SPD -E1 : PULSE GENERATION WITH THE IGNITION SW AND ROTATE DRIVING WHEEL SLOWLY
TE1 -E1 : **9.0-14.0** VOLTS WITH THE IGNITION SW ON AND DATA LINK CONNECTOR 1 TE1-E1 NOT CONNECTED
: **1.5** VOLTS OR LESS WITH THE IGNITION SW ON AND DATA LINK CONNECTOR 1 TE1-E1 CONNECTED
W -E1 : **9.0-14.0** VOLTS WITH THE ENGINE RUNNING AND NO TROUBLE (MALFUNCTION INDICATOR LAMP OFF)
A/C -E1 : **7.5-14.0** VOLTS WITH THE AIR CONDITIONING ON
: **1.5** VOLTS OR LESS WITH THE AIR CONDITIONING OFF
STP -E1 : **7.5-14.0** VOLTS WITH THE STOP LIGHT SW ON (BRAKE PEDAL DEPRESSED)
: **1.5** VOLTS OR LESS WITH THE STOP LIGHT SW OFF

RESISTANCE AT ENGINE CONTROL MODULE CONNECTORS

(DISCONNECT WIRING CONNECTOR)

IDL -E2 : INFINITY (THROTTLE VALVE FULLY OPEN)
: **2.3** KΩ OR LESS (THROTTLE VALVE FULLY CLOSED)
VTA -E2 : **2.0-10.2** KΩ (THROTTLE VALVE FULLY OPEN)
: **0.2-5.7** KΩ (THROTTLE VALVE FULLY CLOSED)
VCC -E2 : **2.5-5.9** KΩ
THA -E2 : **2.0-3 .0** KΩ (INTAKE AIR TEMP. **20**°C (**68**°F))
THW -E2 : **200-400** Ω (ENGINE COOLANT TEMP. **80**°C (**176**°F))
G1,G2-G- : **185-275** Ω (COLD (-**10**°C (**14**°F) TO **0**°C (**122**°F))
: **240-325** Ω (HOT (**50**°C (**122**°F) TO **100**°C (**212**°F)
NE -G- : **185-275** Ω (COLD (-**10**°C (**14**°F) TO **0**°C (**122**°F))
: **240-325** Ω (HOT (**50**°C (**122**°F) TO **100**°C **(212**°F)
ISC1, ISC2, ISC3, ISC4-+B : **10-30** Ω

I 1 IDLE AIR CONTROL VALVE

5-4, 6 : **10-30** Ω
2-1, 3 : **10-30** Ω

I 4, I 5, I 6, I 7, I 8, I 9 INJECTOR

1-2 : **12-16** Ω

H 5, H 6 HEATED OXYGEN SENSOR (BANK 1 SENSOR 1, BANK 1 SENSOR 2)

1-2 : **5.0-6.5** Ω

T 1 THROTTLE POSITION SENSOR

1-4 : **2.5-5.9** KΩ
1-3 : **2.0-10.2** KΩ WITH THE THROTTLE VALVE FULLY OPEN
: **0.2-5.7** KΩ WITH THE THROTTLE VALVE FULLY CLOSED
1-2 : INFINITY WITH THE CLEARANCE BETWEEN LEVER AND STOP SCREW **0.75** MM (**0.030** IN.)
: **2.3** KΩ LESS WITH THE CLEARANCE BETWEEN LEVER AND STOP SCREW **0.50** MM (**0.020** IN.)

F18 FUEL PUMP [FUEL SENDER]

3-6 : **0.2-3.0** Ω

F 5 FUEL PUMP RESISTOR

1-2 : APPROX. **0.73** Ω

E 1 EGR GAS TEMP. SENSOR

1-2 : **69-89** Ω (**50**°C, **122**°F)
: **11-15** Ω (**100**°C, **212**°F)
: **2-4** Ω (**150**° C, **302**°F)

V 4 VSV (FUEL PRESSURE CONTROL)

1-2 : **37-44** Ω (**20**°C (**68**°F)

SERVICE HINTS

V 3 VSV (EGR)
1-2 : **30-34** Ω (**20**°C, **68**°F)
E 3 ENGINE COOLANT TEMP. SENSOR
1-2 : **10-20** KΩ (**-20** °C, **-4**°F)
: **4-7** KΩ (**0**°C, **32**°F)
: **2-3** KΩ (**20**°C, **68**°F)
: **0.9-1.3** KΩ (**40**°C, **104**°F)
: **0.4-0.7** KΩ (**60**°C, **140**°F)
: **0.2-0.4** KΩ (**80**°C, **176**°F)

: PARTS LOCATION

CODE	SEE PAGE	CODE	SEE PAGE	CODE	SEE PAGE
A 3	22	**F 5**	22	**I12**	25
C 3	22	**F 6** A	22	**J 1**	25
C 8	24	**F 7** B	22	**J 2**	25
C10 A	24	**F11**	25	**J 8**	25
C11 B	24	**F18**	26	**J 9**	25
C13	24	**H 5**	22	**K 1**	23
D 1	22	**H 6**	22	**K 2**	23
D 2	22	**I 1**	23	**M 1**	23
D 3	24	**I 2**	23	**N 1**	23
E 1	22	**I 3**	23	**P 1**	23
E 3	22	**I 4**	23	**S13**	25
E 4 A	24	**I 5**	23	**T 1**	23
E 5 C	24	**I 6**	23	**V 3**	23
E 6 B	24	**I 7**	23	**V 4**	23
E 7 D	24	**I 8**	23		
F 4	22	**I 9**	23		

: RELAY BLOCKS

CODE	SEE PAGE	RELAY BLOCKS (RELAY BLOCK LOCATION)
2	18	R/B NO. 2 (FRONT SIDE OF LEFT FENDER)

: CONNECTOR JOINING WIRE HARNESS AND WIRE HARNESS

CODE	SEE PAGE	JOINING WIRE HARNESS AND WIRE HARNESS (CONNECTOR LOCATION)
EA2	30	COWL WIRE AND ENGINE ROOM MAIN WIRE (LEFT FENDER)
EB1	30	ENGINE ROOM MAIN WIRE AND ENGINE WIRE (NEAR THE DISTRIBUTOR)
EZ1	30	ENGINE WIRE AND VSV SUB WIRE (NEAR THE THROTTLE POSITION SENSOR)
ID2	32	COWL WIRE AND FLOOR NO. 1 WIRE (LEFT KICK PANEL)
IH1	32	ENGINE WIRE AND COWL WIRE (BEHIND GLOVE BOX)
IH2		
BO1	34	FLOOR NO. 1 WIRE AND LUGGAGE ROOM NO. 2 WIRE (BESIDE THE FUEL TANK)

: GROUND POINTS

CODE	SEE PAGE	GROUND POINTS LOCATION
EB	30	FRONT SIDE OF LEFT FENDER
EC	30	AIR INTAKE CHAMBER
ID	32	LEFT KICK PANEL
IE	32	RIGHT KICK PANEL
BF	34	UNDER THE CENTER CONSOLE BOX

: SPLICE POINTS

CODE	SEE PAGE	WIRE HARNESS WITH SPLICE POINTS	CODE	SEE PAGE	WIRE HARNESS WITH SPLICE POINTS
E14	30	ENGINE WIRE	**I 6**	32	COWL WIRE
E15			**I12**		
E16			**I13**		
E17			**I14**		
E19			**I18**	32	ENGINE WIRE
E20			**I19**		
E21					

ENGINE CONTROL

A 3

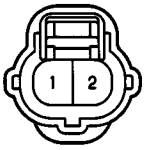

C 3 DARK GRAY

C 8

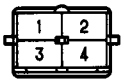

C10 (A) GRAY

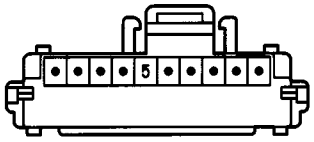

C11 (B) BLUE

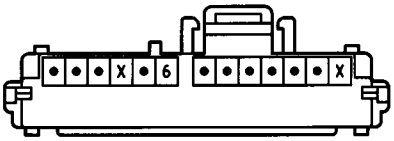

C13

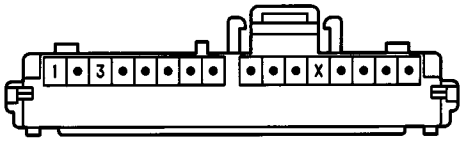

D 1 BLACK

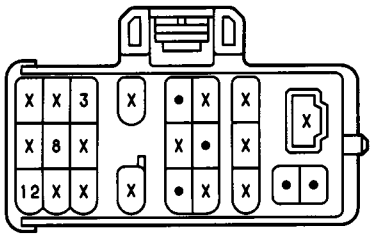

D 2 BLACK

D 3

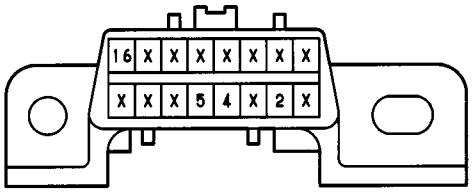

E 1 DARK GRAY

E 3 GREEN

E 4 (A) DARK GRAY

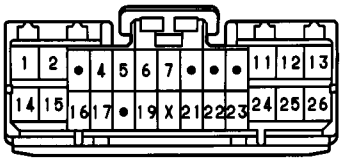

E 5 (C) DARK GRAY

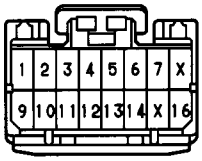

E 6 (B) DARK GRAY

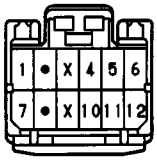

E 7 (D) DARK GRAY

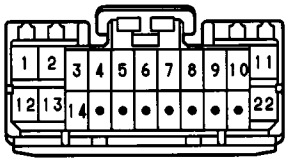

F 4 BLACK

F 5 DARK GRAY

F 6 (A)

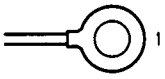

F 7 (B) GRAY

F11

(SEE PAGE 20)

F18 DARK GRAY

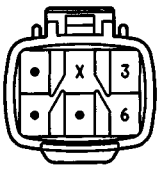

H 5 DARK GRAY

H 6 DARK GRAY

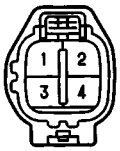

I 1 BLACK

I 2 DARK GRAY

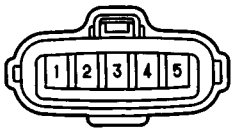

I 3 BLACK

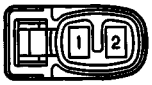

I 4, I 6, I 8 GRAY

I 5, I 7, I 9 BROWN

I12 BLACK

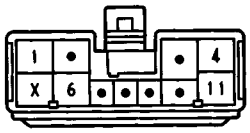

J 1

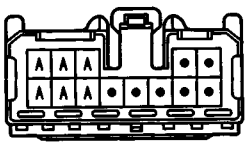

(HINT:SEE PAGE 7)

J 2 BLUE

(HINT:SEE PAGE 7)

J 8 BLUE

(HINT:SEE PAGE 7)

J 9

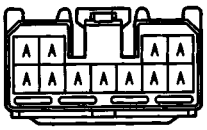

(HINT:SEE PAGE 7)

K 1, K 2 DARK GRAY

M 1 BLACK

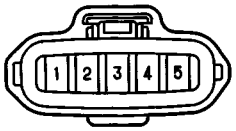

N 1 GRAY

P 1 GRAY

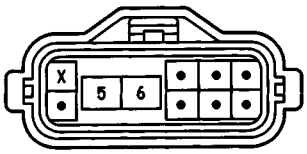

S13 BLACK

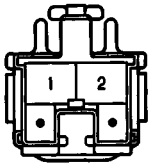

T 1 BLACK

V 3 BLUE

V 4 BROWN

HEADLIGHT

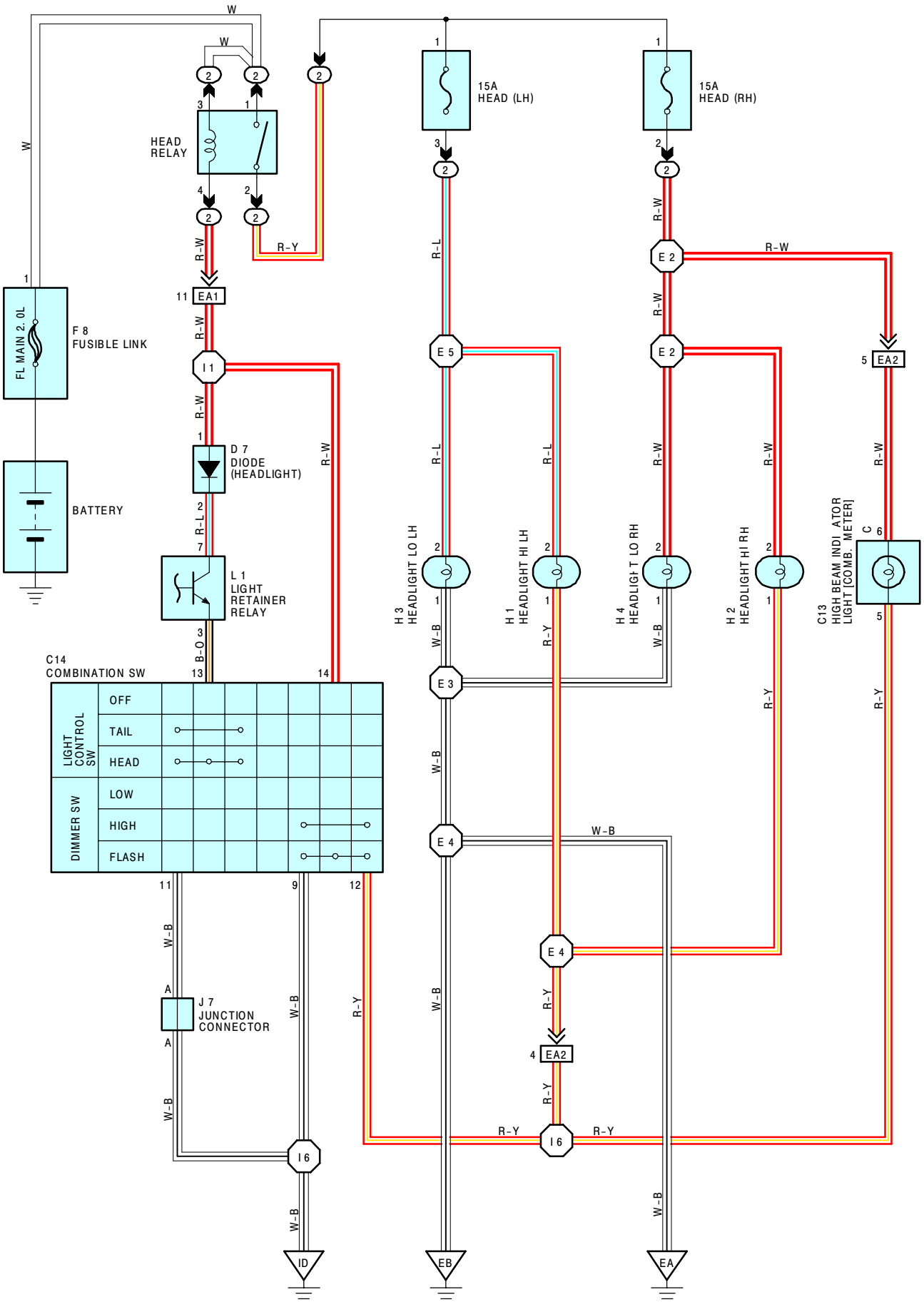
W
HEAD RELAY
15A HEAD (LH)
15A HEAD (RH)
FL MAIN 2.0L
F 8 FUSIBLE LINK
BATTERY
D 7 DIODE (HEADLIGHT)
L 1 LIGHT RETAINER RELAY
C14 COMBINATION SW
LIGHT CONTROL SW
OFF
TAIL
HEAD
DIMMER SW
LOW
HIGH
FLASH
J 7 JUNCTION CONNECTOR
H 3 HEADLIGHT LO LH
H 1 HEADLIGHT HI LH
H 4 HEADLIGHT LO RH
H 2 HEADLIGHT HI RH
C13 HIGH BEAM INDICATOR LIGHT [COMB. METER]
R-W
R-L
R-Y
W-B
B-O
EA1
EA2
E 2
E 3
E 4
E 5
I 1
I 6
ID
EB
EA

SERVICE HINTS

HEAD RELAY

(2) 1 - **(2)** 2 : CLOSED WITH THE LIGHT CONTROL SW AT **HEAD** POSITION OR THE DIMMER SW AT **FLASH** POSITION (WHEN THE LIGHT AUTO TURN OFF SYSTEM DOES NOT OPERATE)

C14 LIGHT CONTROL SW [COMB. SW]

13-11 : CLOSED WITH THE LIGHT CONTROL SW AT **HEAD** POSITION

C14 DIMMER SW [COMB. SW]

14-9 : CLOSED WITH THE DIMMER SW AT **FLASH** POSITION

12-9 : CLOSED WITH THE DIMMER SW AT **HIGH** OR **FLASH** POSITION

: PARTS LOCATION

CODE	SEE PAGE	CODE	SEE PAGE	CODE	SEE PAGE
C13	24	**H 1**	22	**J 7**	25
C14	24	**H 2**	22	**L 1**	25
D 7	24	**H 3**	22		
F 8	22	**H 4**	22		

: RELAY BLOCKS

CODE	SEE PAGE	RELAY BLOCKS (RELAY BLOCK LOCATION)
2	18	R/B NO. 2 (FRONT SIDE OF LEFT FENDER)

: CONNECTOR JOINING WIRE HARNESS AND WIRE HARNESS

CODE	SEE PAGE	JOINING WIRE HARNESS AND WIRE HARNESS (CONNECTOR LOCATION)
EA1	30	COWL WIRE AND ENGINE ROOM MAIN WIRE (LEFT FENDER)
EA2		

: GROUND POINTS

CODE	SEE PAGE	GROUND POINTS LOCATION
EA	30	FRONT SIDE OF RIGHT FENDER
EB	30	FRONT SIDE OF LEFT FENDER
ID	32	LEFT KICK PANEL

: SPLICE POINTS

CODE	SEE PAGE	WIRE HARNESS WITH SPLICE POINTS	CODE	SEE PAGE	WIRE HARNESS WITH SPLICE POINTS
E 2	30	ENGINE ROOM MAIN WIRE	**E 5**	30	ENGINE ROOM MAIN WIRE
E 3			**I 1**	32	COWL WIRE
E 4			**I 6**		

C13

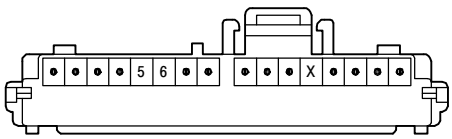

C14 BLACK

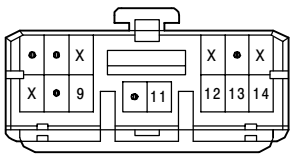

D 7 ORANGE

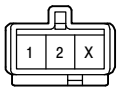

F 8

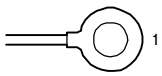

H 1, H 2 BLACK

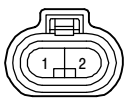

H 3, H 4 BROWN

J 7 BLUE

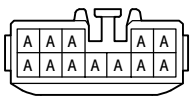

(HINT : SEE PAGE 7)

L 1

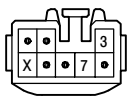

TAILLIGHT

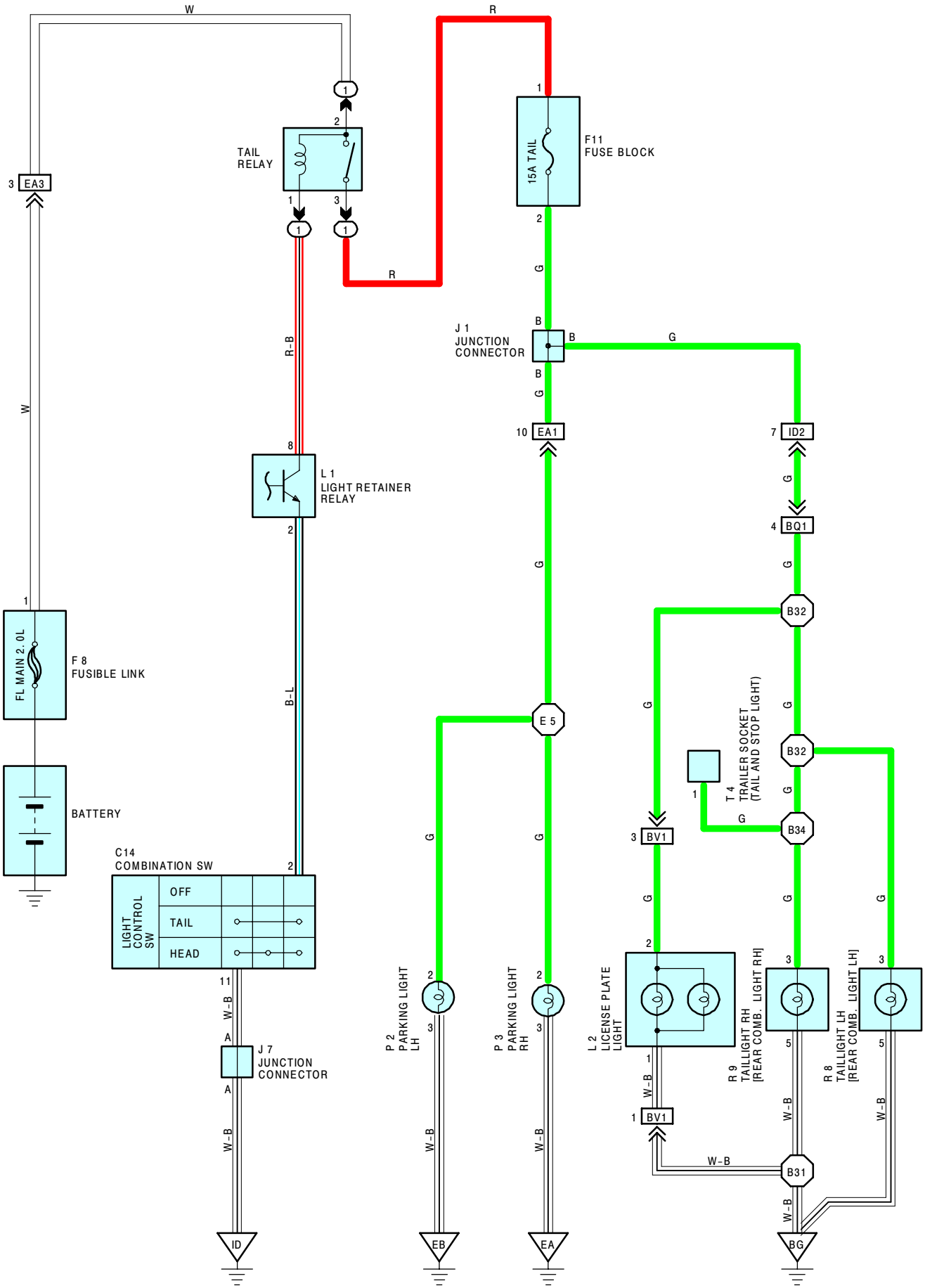
W
R
TAIL RELAY
F11 FUSE BLOCK
15A TAIL
EA3
R-B
J 1 JUNCTION CONNECTOR
L 1 LIGHT RETAINER RELAY
EA1
ID2
BQ1
B32
F 8 FUSIBLE LINK
FL MAIN 2.0L
B-L
E 5
BATTERY
C14 COMBINATION SW
LIGHT CONTROL SW
OFF
TAIL
HEAD
T 4 TRAILER SOCKET (TAIL AND STOP LIGHT)
B34
BV1
J 7 JUNCTION CONNECTOR
P 2 PARKING LIGHT LH
P 3 PARKING LIGHT RH
L 2 LICENSE PLATE LIGHT
R 9 TAILLIGHT RH [REAR COMB. LIGHT RH]
R 8 TAILLIGHT LH [REAR COMB. LIGHT LH]
B31
ID
EB
EA
BG

SERVICE HINTS

TAIL RELAY

(1) 2- **(1)** 3 : CLOSED WITH THE LIGHT CONTROL SW AT **TAIL** OR **HEAD** POSITION (WHEN THE LIGHT AUTO TURN OFF SYSTEM DOES NOT OPERATE)

: PARTS LOCATION

CODE	SEE PAGE	CODE	SEE PAGE	CODE	SEE PAGE
C14	24	**J 7**	25	**P 3**	23
F 8	22	**L 1**	25	**R 8**	27
F11	25	**L 2**	26	**R 9**	27
J 1	25	**P 2**	23	**T 4**	27

: RELAY BLOCKS

CODE	SEE PAGE	RELAY BLOCKS (RELAY BLOCK LOCATION)
1	20	R/B NO. 1 (LEFT KICK PANEL)

: CONNECTOR JOINING WIRE HARNESS AND WIRE HARNESS

CODE	SEE PAGE	JOINING WIRE HARNESS AND WIRE HARNESS (CONNECTOR LOCATION)
EA1	30	COWL WIRE AND ENGINE ROOM MAIN WIRE (LEFT FENDER)
EA3		
ID2	32	COWL WIRE AND FLOOR NO. 1 WIRE (LEFT KICK PANEL)
BQ1	34	FLOOR NO. 3 WIRE AND FLOOR NO. 1 WIRE (LEFT QUARTER PANEL INNER)
BV1	36	LUGGAGE ROOM NO. 3 WIRE AND FLOOR NO. 3 WIRE (UNDER THE LOWER BACK PANEL)

: GROUND POINTS

CODE	SEE PAGE	GROUND POINTS LOCATION
EA	30	FRONT SIDE OF RIGHT FENDER
EB	30	FRONT SIDE OF LEFT FENDER
ID	32	LEFT KICK PANEL
BG	34	LOWER BACK PANEL CENTER

: SPLICE POINTS

CODE	SEE PAGE	WIRE HARNESS WITH SPLICE POINTS	CODE	SEE PAGE	WIRE HARNESS WITH SPLICE POINTS
E 5	30	ENGINE ROOM MAIN WIRE	**B32**	36	FLOOR NO. 3 WIRE
B31	36	FLOOR NO. 3 WIRE	**B34**		

C14 BLACK

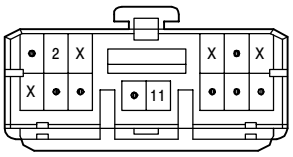

F 8

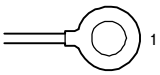

F11

(SEE PAGE 20)

J 1

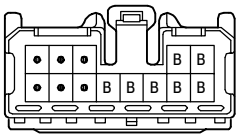

(HINT : SEE PAGE 7)

J 7 BLUE

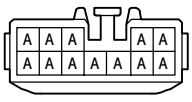

(HINT : SEE PAGE 7)

L 1

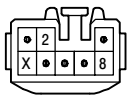

L 2

P 2, P 3 GRAY

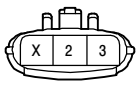

R 8, R 9

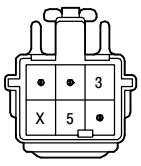

T 4 BLACK

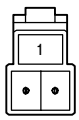

STOP LIGHT

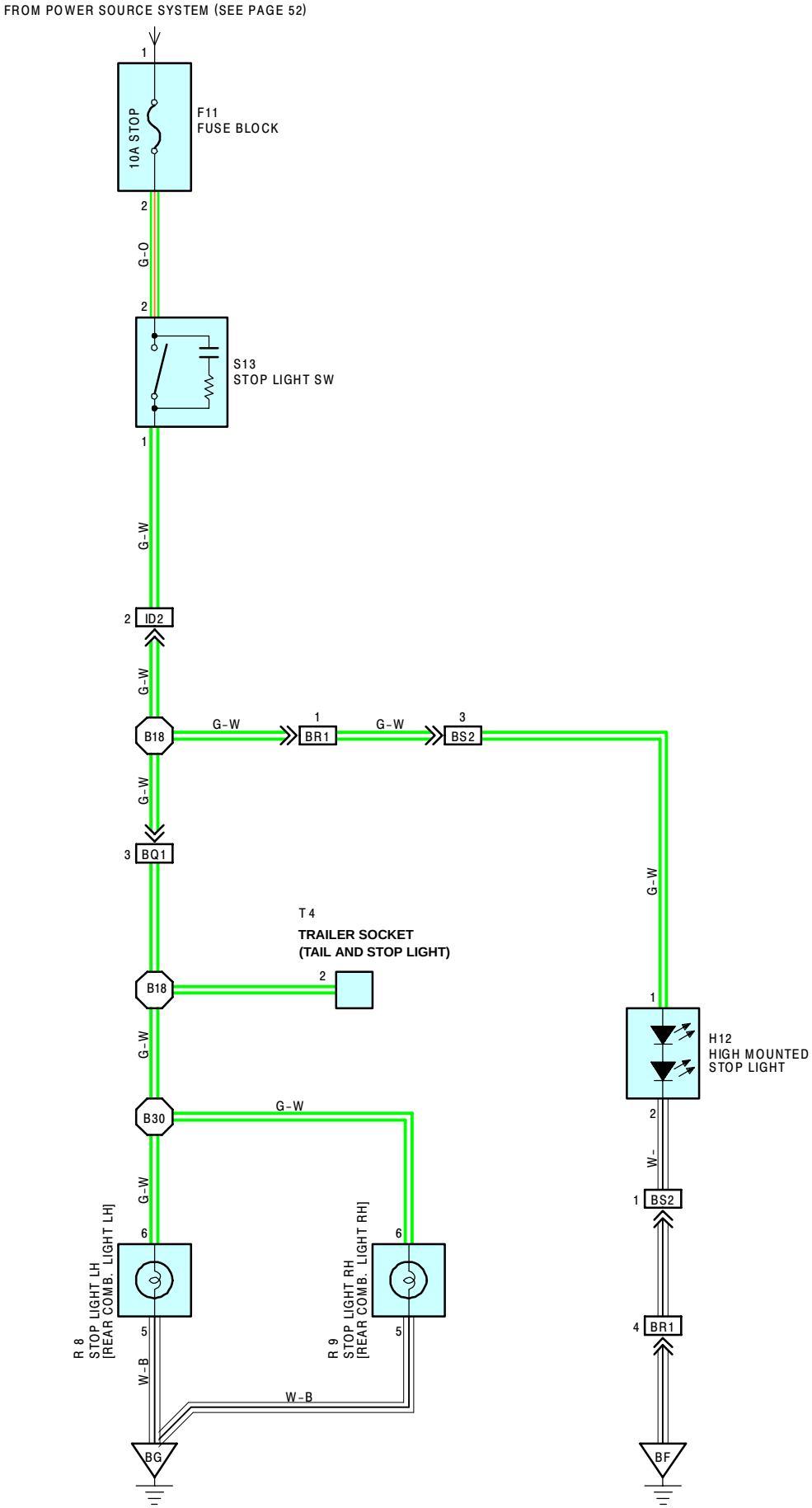
FROM POWER SOURCE SYSTEM (SEE PAGE 52)
1
10A STOP
F11
FUSE BLOCK
2
G-O
2
S13
STOP LIGHT SW
1
G-W
2 ID2
G-W
B18
G-W
1 BR1
G-W
3 BS2
G-W
3 BQ1
T 4
TRAILER SOCKET
(TAIL AND STOP LIGHT)
B18
2
G-W
B30
G-W
G-W
6
R 8
STOP LIGHT LH
[REAR COMB. LIGHT LH]
5
W-B
6
R 9
STOP LIGHT RH
[REAR COMB. LIGHT RH]
5
W-B
BG
G-W
1
H12
HIGH MOUNTED
STOP LIGHT
2
W-
1 BS2
4 BR1
BF

SERVICE HINTS

S13 STOP LIGHT SW

2-1 : CLOSED WITH THE BRAKE PEDAL DEPRESSED

○ : PARTS LOCATION

CODE	SEE PAGE	CODE	SEE PAGE	CODE	SEE PAGE
F11	25	**R 8**	27	**S13**	25
H12	26	**R 9**	27	**T 4**	27

▭ : CONNECTOR JOINING WIRE HARNESS AND WIRE HARNESS

CODE	SEE PAGE	JOINING WIRE HARNESS AND WIRE HARNESS (CONNECTOR LOCATION)
ID2	32	COWL WIRE AND FLOOR NO. 1 WIRE HARNESS (LEFT KICK PANEL)
BQ1	34	FLOOR NO. 3 WIRE AND FLOOR NO. 1 WIRE (LEFT QUARTER PANEL INNER)
BR1	34	LUGGAGE ROOM NO. 1 WIRE AND FLOOR NO. 1 WIRE (LEFT QUARTER PANEL INNER)
BS2	34	BACK DOOR NO. 1 WIRE AND LUGGAGE ROOM NO. 1 WIRE (LEFT REAR SIDE OF ROOF)

▽ : GROUND POINTS

CODE	SEE PAGE	GROUND POINTS LOCATION
BF	34	UNDER THE CENTER CONSOLE BOX
BG	34	LOWER BACK PANEL CENTER

⬡ : SPLICE POINTS

CODE	SEE PAGE	WIRE HARNESS WITH SPLICE POINTS	CODE	SEE PAGE	WIRE HARNESS WITH SPLICE POINTS
B18	36	FLOOR WIRE	**B33**	36	FLOOR NO. 3 WIRE
B30	36	FLOOR NO. 3 WIRE			

F11

(SEE PAGE 20)

H12

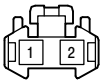

R 8, R 9

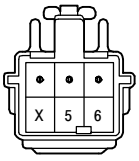

S13 BLACK

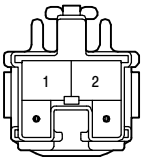

T 4 BLACK

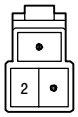

Brought to you by BirfMark

BACK-UP LIGHT

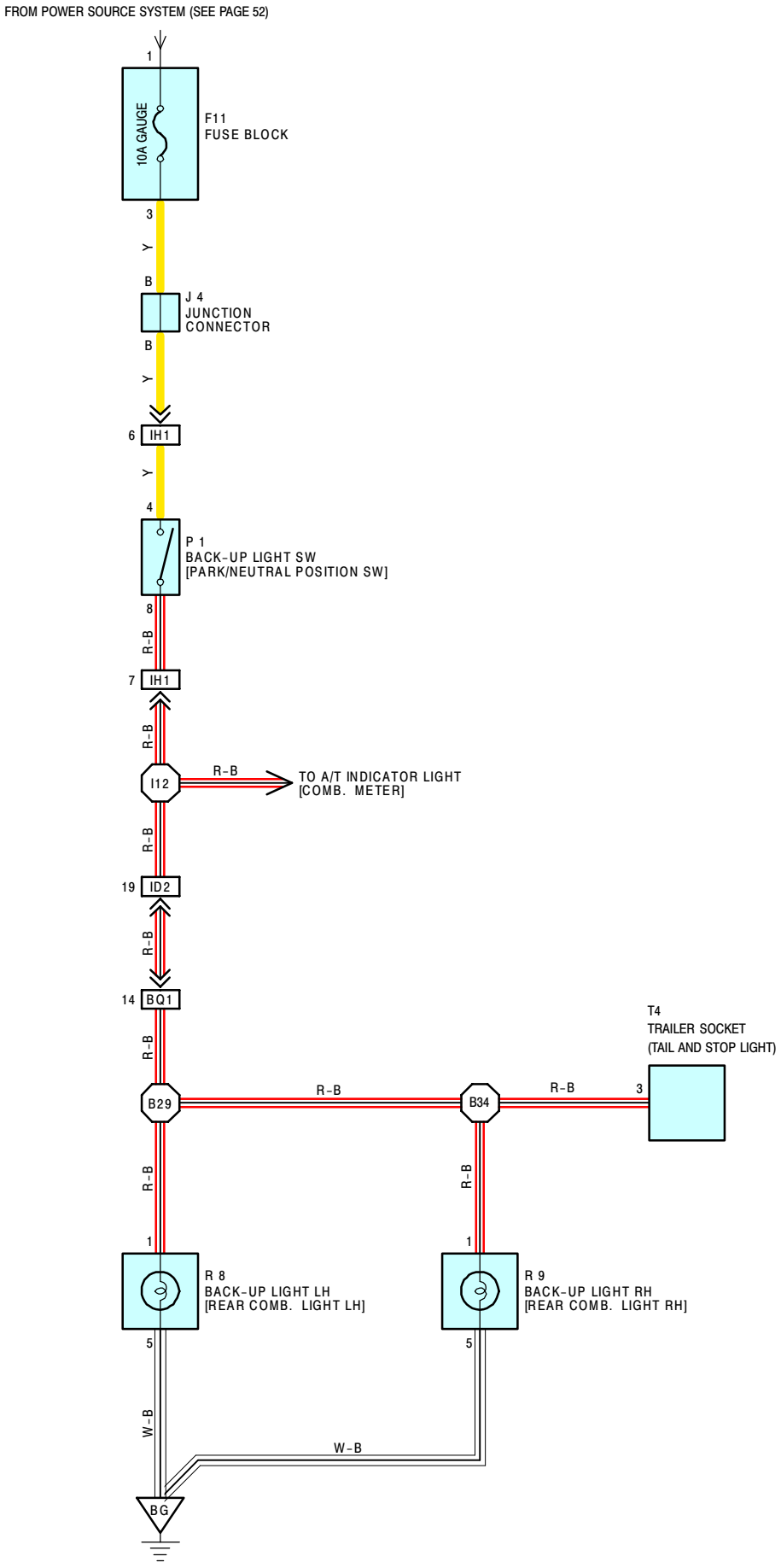

Brought to you by BirfMark

SERVICE HINTS

P 1 BACK-UP LIGHT SW [PARK/NEUTRAL POSITION SW]
4-8 : CLOSED WITH THE SHIFT LEVER IN **R** POSITION

○ : PARTS LOCATION

CODE	SEE PAGE	CODE	SEE PAGE	CODE	SEE PAGE
F11	25	**P 1**	23	**R 9**	27
J 4	25	**R 8**	27	**T 4**	27

▭ : CONNECTOR JOINING WIRE HARNESS AND WIRE HARNESS

CODE	SEE PAGE	JOINING WIRE HARNESS AND WIRE HARNESS (CONNECTOR LOCATION)
ID2	32	COWL WIRE AND FLOOR NO. 1 WIRE (LEFT KICK PANEL)
IH1	32	ENGINE WIRE AND COWL WIRE (BEHIND GLOVE BOX)
BQ1	34	FLOOR NO. 3 WIRE AND FLOOR NO. 1 WIRE (LEFT QUARTER PANEL INNER)

▽ : GROUND POINTS

CODE	SEE PAGE	GROUND POINTS LOCATION
BG	34	LOWER BACK PANEL CENTER

⬡ : SPLICE POINTS

CODE	SEE PAGE	WIRE HARNESS WITH SPLICE POINTS	CODE	SEE PAGE	WIRE HARNESS WITH SPLICE POINTS
I12	32	COWL WIRE	**B34**	36	FLOOR NO. 3 WIRE
B29	36	FLOOR NO. 3 WIRE			

F11

(SEE PAGE 20)

J 4

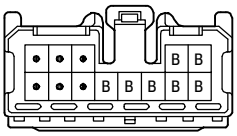

P 1 GRAY

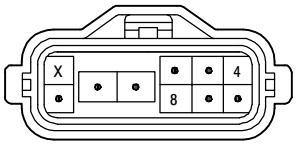

R 8, R 9

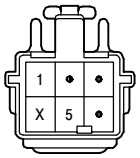

T 4 BLACK

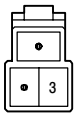

ILLUMINATION

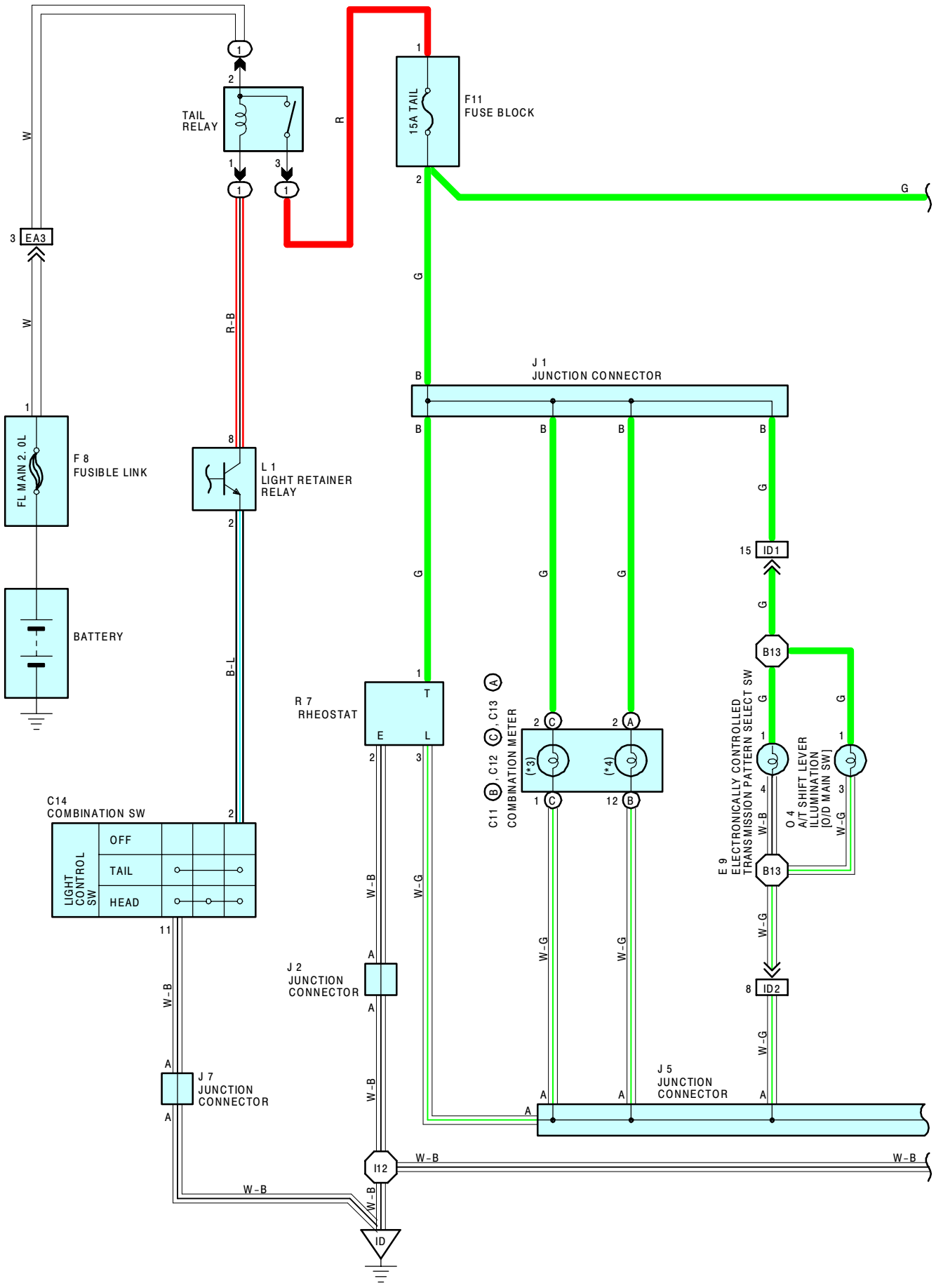

*1 : SEPARATE TYPE AMPLIFIER
*2 : BUILT-IN TYPE AMPLIFIER
*3 : A/T INDICATOR ILLUMINATION
*4 : METER ILLUMINATION

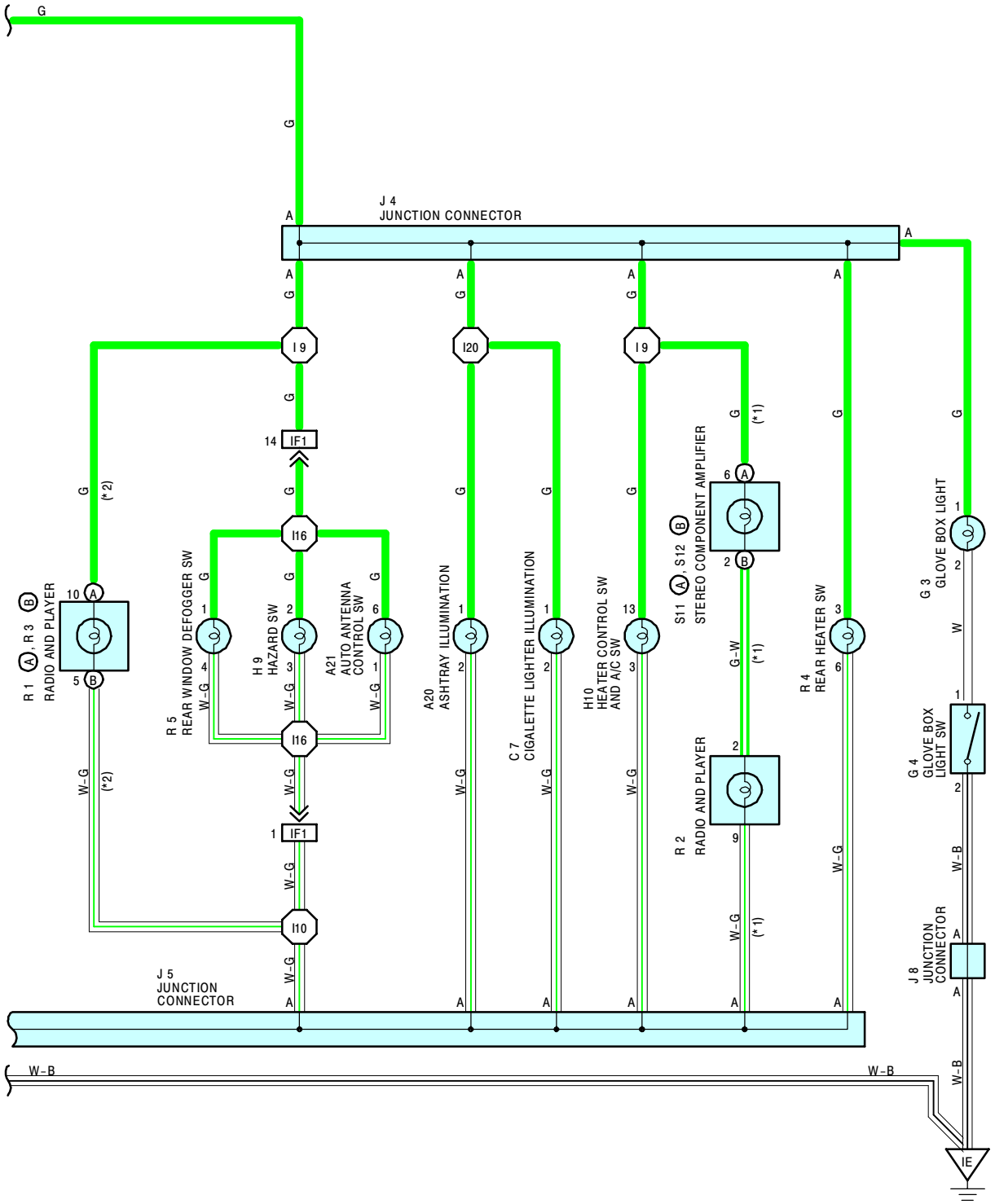

ILLUMINATION

SERVICE HINTS

TAIL RELAY

(1) 2- **(1)** 3 : CLOSED WITH THE LIGHT CONTROL SW AT **TAIL** OR **HEAD** POSITION
(WHEN LIGHT AUTO TURN OFF SYSTEM DOES NOT OPERATE)

R 7 RHEOSTAT

1-2 : APPROX. **12** VOLTS WITH THE RHEOSTAT FULLY TURNED COUNTERWISE AND **0** VOLTS WITH IT FULLY TURNED CLOCKWISE

: PARTS LOCATION

CODE	SEE PAGE	CODE	SEE PAGE	CODE	SEE PAGE
A20	24	**G 3**	25	**L 1**	25
A21	24	**G 4**	25	**O 4**	27
C 7	24	**H 9**	25	**R 1** A	25
C11 B	24	**H10**	25	**R 2**	25
C12 C	24	**J 1**	25	**R 3** B	25
C13 A	24	**J 2**	25	**R 4**	25
C14	24	**J 4**	25	**R 5**	25
E 9	26	**J 5**	25	**R 7**	25
F 8	22	**J 7**	25	**S11** A	25
F11	25	**J 8**	25	**S12** B	25

: RELAY BLOCKS

CODE	SEE PAGE	RELAY BLOCKS (RELAY BLOCK LOCATION)
1	20	R/B NO. 1 (LEFT KICK PANEL)

: CONNECTOR JOINING WIRE HARNESS AND WIRE HARNESS

CODE	SEE PAGE	JOINING WIRE HARNESS AND WIRE HARNESS (CONNECTOR LOCATION)
EA3	30	COWL WIRE AND ENGINE ROOM MAIN WIRE (LEFT FENDER)
ID1	32	COWL WIRE AND FLOOR NO. 1 WIRE (LEFT KICK PANEL)
ID2		
IF1	32	COWL WIRE AND INSTRUMENT PANEL WIRE (INSTRUMENT PANEL CENTER)

: GROUND POINTS

CODE	SEE PAGE	GROUND POINTS LOCATION
ID	32	LEFT KICK PANEL
IE	32	RIGHT KICK PANEL

: SPLICE POINTS

CODE	SEE PAGE	WIRE HARNESS WITH SPLICE POINTS	CODE	SEE PAGE	WIRE HARNESS WITH SPLICE POINTS
I 9	32	COWL WIRE	**I16**	32	INSTRUMENT PANEL WIRE
I10			**I20**	32	COWL WIRE
I12			**B13**	36	FLOOR WIRE

A20

A21 BLACK

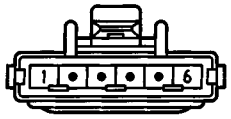

C 7 GRAY

C11 (B) BLUE

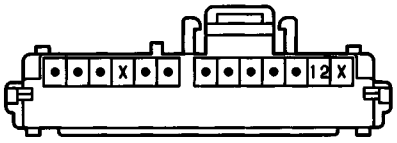

C12 (C) BROWN

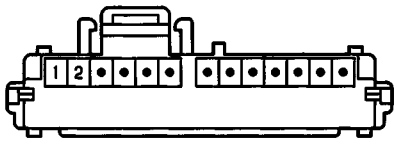

C13 (A)

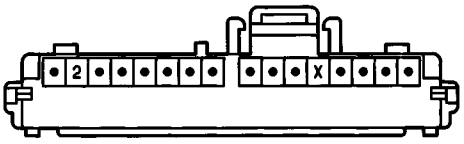

C14 BLACK

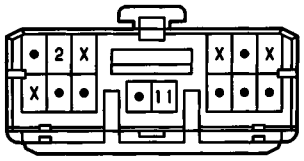

E 9

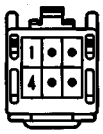

F 8

F11

(SEE PAGE 20)

G 3 GRAY

G 4

H 9 BLACK

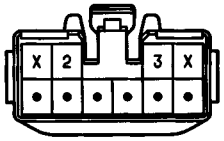

H10

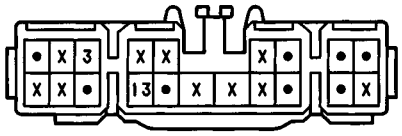

J 1

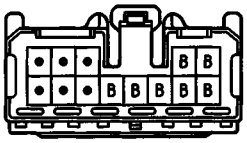

(HINT:SEE PAGE 7)

J 2 BLUE

(HINT:SEE PAGE 7)

J 4

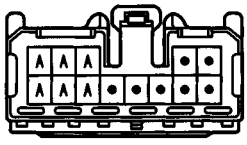

(HINT:SEE PAGE 7)

J 5 BLUE

(HINT:SEE PAGE 7)

J 7 BLUE

(HINT:SEE PAGE 7)

J 8 BLUE

(HINT:SEE PAGE 7)

L 1

O 4 BLUE

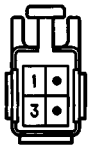

R 1 (A) GRAY

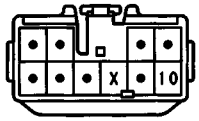

R 2

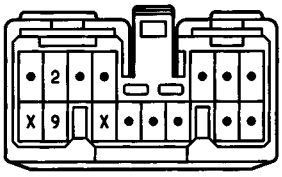

R 3 (B) GRAY

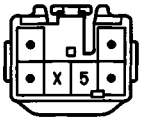

R 4 BLACK

R 5 BLACK

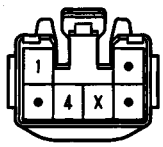

R 7

S11 (A)

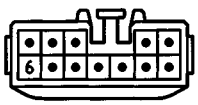

S12 (B)

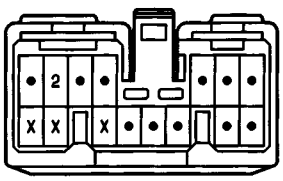

INTERIOR LIGHT

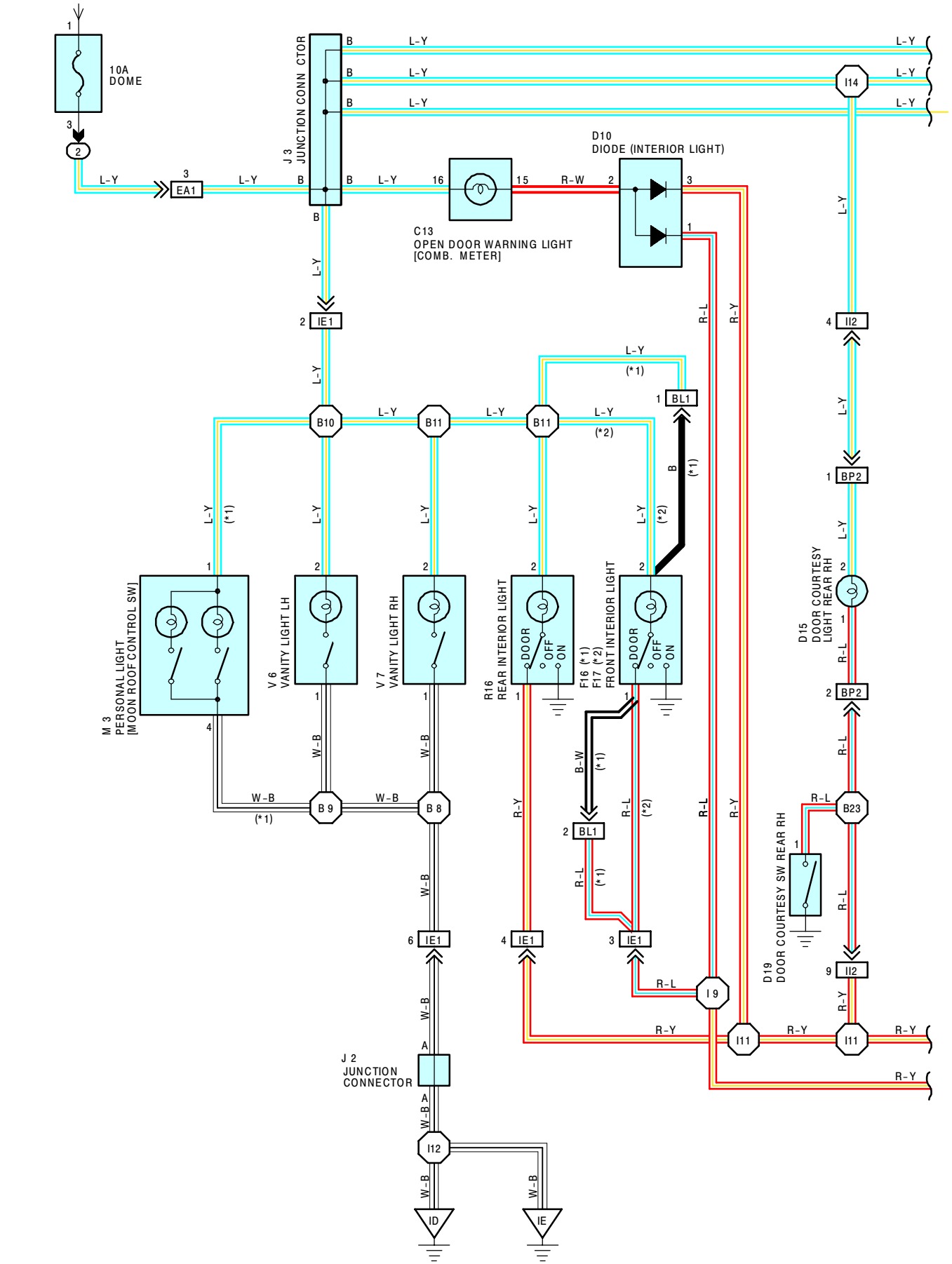

*1 : W/ MOON ROOF
*2 : W/O MOON ROOF

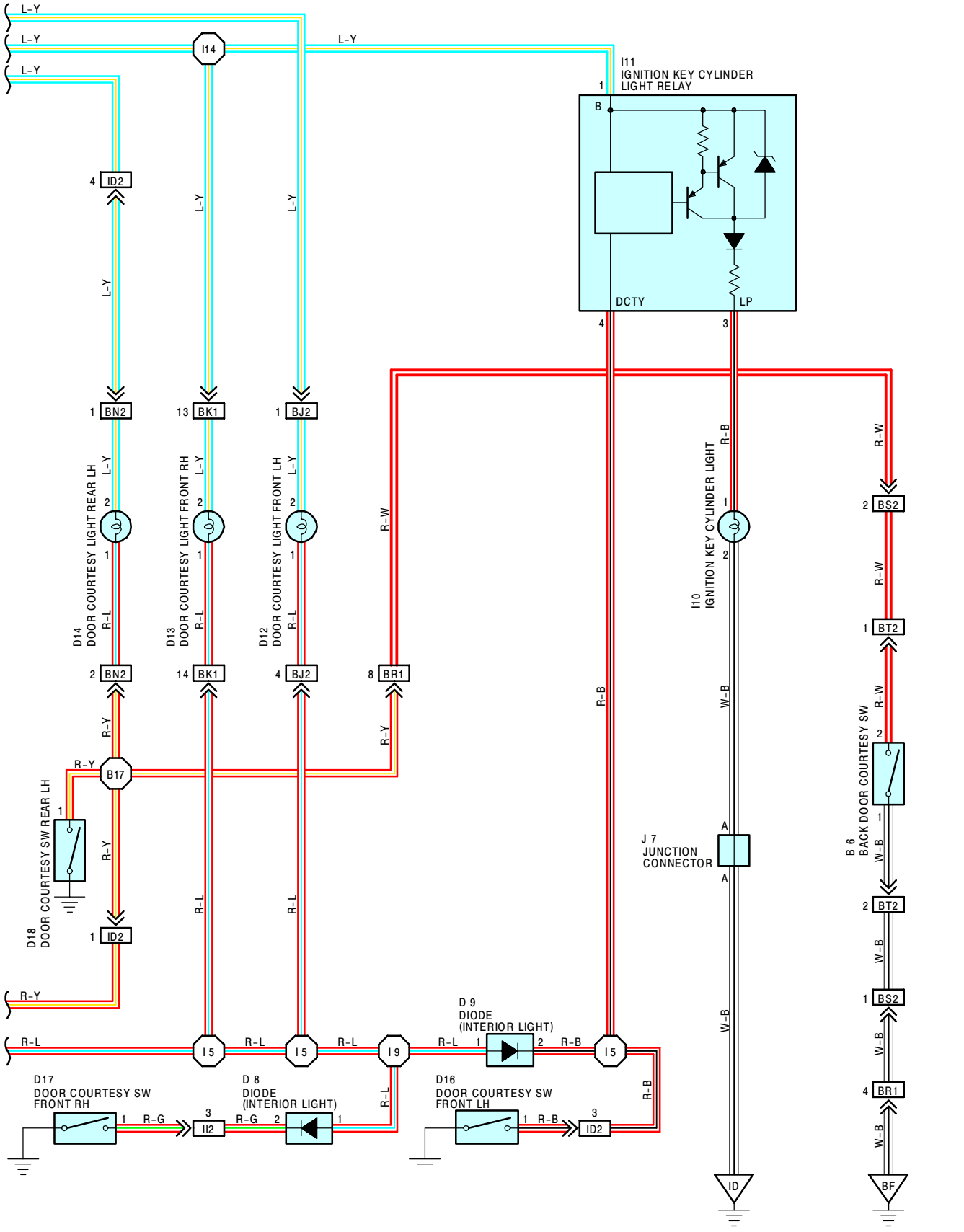

INTERIOR LIGHT

SERVICE HINTS

F16, F17 FRONT INTERIOR LIGHT
2-GROUND : ALWAYS APPROX. **12** VOLTS
2-1 : CLOSED WITH THE INTERIOR LIGHT POSITION SW AT **DOOR** POSITION
D16, D17, D18, D19 DOOR COURTESY SW FRONT LH, RH, REAR LH, RH
1-GROUND : CLOSED WITH EACH OF THE DOOR OPEN
B 6 BACK DOOR COURTESY SW
2-1 : CLOSED WITH THE BACK DOOR OPEN

: PARTS LOCATION

CODE	SEE PAGE	CODE	SEE PAGE	CODE	SEE PAGE
B 6	26	**D15**	26	**I11**	25
C13	24	**D16**	26	**J 2**	25
D 8	24	**D17**	26	**J 3**	25
D 9	24	**D18**	26	**J 7**	25
D10	24	**D19**	26	**M 3**	26
D12	26	**F16**	26	**R16**	27
D13	26	**F17**	26	**V 6**	27
D14	26	**I10**	25	**V 7**	27

: RELAY BLOCKS

CODE	SEE PAGE	RELAY BLOCKS (RELAY BLOCK LOCATION)
2	18	R/B NO. 2 (FRONT SIDE OF LEFT FENDER)

: CONNECTOR JOINING WIRE HARNESS AND WIRE HARNESS

CODE	SEE PAGE	JOINING WIRE HARNESS AND WIRE HARNESS (CONNECTOR LOCATION)
EA1	30	COWL WIRE AND ENGINE ROOM MAIN WIRE (LEFT FENDER)
ID2	32	COWL WIRE AND FLOOR NO. 1 WIRE (LEFT KICK PANEL)
1E1	32	ROOF WIRE AND COWL WIRE (LEFT KICK PANEL)
II2	32	COWL WIRE AND FLOOR NO. 2 WIRE (RIGHT KICK PANEL)
BJ2	34	FRONT DOOR LH WIRE AND COWL WIRE (LEFT KICK PANEL)
BK1	34	FRONT DOOR RH WIRE AND COWL WIRE (RIGHT KICK PANEL)
BL1	34	ROOF WIRE AND ROOF NO. 3 WIRE (ROOF LEFT)
BN2	34	REAR DOOR LH WIRE AND FLOOR NO. 1 WIRE (LEFT CENTER PILLAR)
BP2	34	REAR DOOR RH WIRE AND FLOOR NO. 2 WIRE (RIGHT CENTER PILLAR)
BR1	34	LUGGAGE ROOM NO. 1 WIRE AND FLOOR NO. 1 WIRE (LEFT QUARTER PANEL INNER)
BS2	34	BACK DOOR NO. 1 WIRE AND LUGGAGE ROOM NO. 1 WIRE (LEFT REAR SIDE OF ROOF)
BT2	36	BACK DOOR NO. 1 WIRE AND BACK DOOR NO. 2 WIRE (BACK DOOR LEFT)

: GROUND POINTS

CODE	SEE PAGE	GROUND POINTS LOCATION
ID	32	LEFT KICK PANEL
IE	32	RIGHT KICK PANEL
BF	34	UNDER THE CENTER CONSOLE BOX

: SPLICE POINTS

CODE	SEE PAGE	WIRE HARNESS WITH SPLICE POINTS	CODE	SEE PAGE	WIRE HARNESS WITH SPLICE POINTS
I 5	32	COWL WIRE	**B 9**	36	ROOF WIRE
I 9			**B10**		
I11			**B11**		
I12			**B17**	36	FLOOR WIRE
I14			**B23**	36	FLOOR NO. 2 WIRE
B 8	36	ROOF WIRE			

B 6

C13

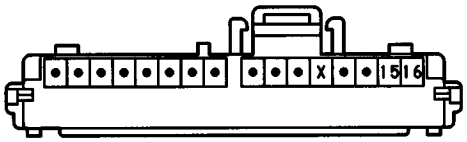

D 8, D 9 GRAY

D10

D12, D13, D14, D15

D16, D17, D18, D19 BLUE

F16, F17, R16

I10

I11

J 2 BLUE

(HINT:SEE PAGE 7)

J 3

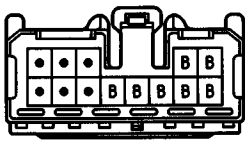

(HINT:SEE PAGE 7)

J 7 BLUE

(HINT:SEE PAGE 7)

M 3

V 6, V 7 BLUE

TURN SIGNAL AND HAZARD WARNING LIGHT

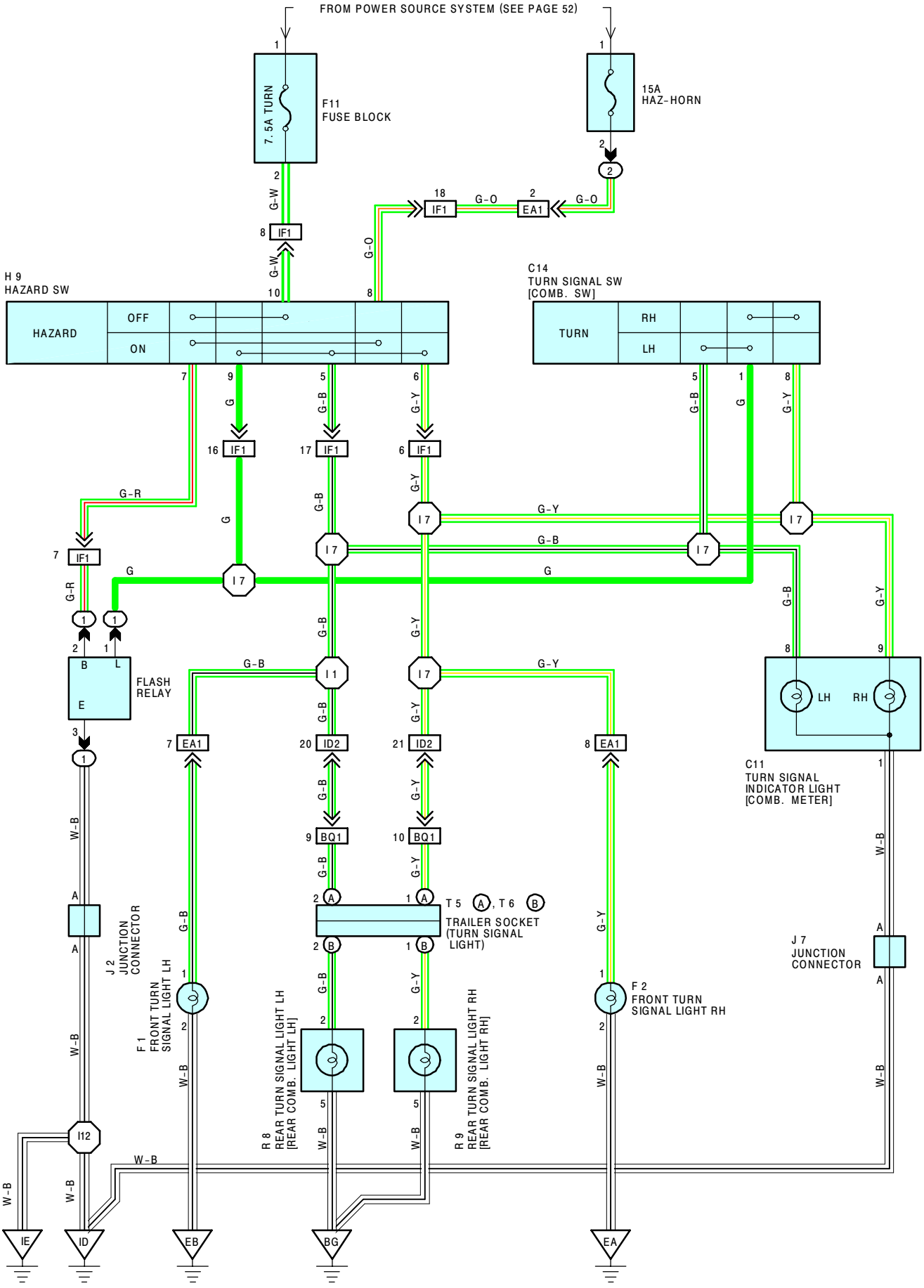

SERVICE HINTS

FLASH RELAY

(1) 2-GROUND : APPROX. **12** VOLTS WITH THE IGNITION SW ON OR THE HAZARD SW ON

(1) 1-GROUND : CHANGES FROM **12** TO **0** VOLTS WITH THE IGNITION SW ON AND THE TURN SIGNAL SW LEFT OR RIGHT POSITION, AND WITH THE HAZARD SW ON

(1) 3-GROUND : ALWAYS CONTINUITY

○ : PARTS LOCATION

CODE	SEE PAGE	CODE	SEE PAGE	CODE		SEE PAGE
C11	24	**F11**	25	**R 8**		27
C14	24	**H 9**	25	**R 9**		27
F 1	22	**J 2**	25	**T 5**	A	27
F 2	22	**J 7**	25	**T 6**	B	27

⬭ : RELAY BLOCKS

CODE	SEE PAGE	RELAY BLOCKS (RELAY BLOCK LOCATION)
1	20	R/B NO. 1 (LEFT KICK PANEL)
2	18	R/B NO. 2 (FRONT SIDE OF LEFT FENDER)

▭ : CONNECTOR JOINING WIRE HARNESS AND WIRE HARNESS

CODE	SEE PAGE	JOINING WIRE HARNESS AND WIRE HARNESS (CONNECTOR LOCATION)
EA1	30	COWL WIRE AND ENGINE ROOM MAIN WIRE (LEFT FENDER)
ID2	32	COWL WIRE AND FLOOR NO. 1 WIRE (LEFT KICK PANEL)
1F1	32	COWL WIRE AND INSTRUMENT PANEL WIRE (INSTRUMENT PANEL CENTER)
BQ1	34	FLOOR NO. 3 WIRE AND FLOOR NO. 1 WIRE (LEFT QUARTER PANEL INNER)

▽ : GROUND POINTS

CODE	SEE PAGE	GROUND POINTS LOCATION
EA	30	FRONT SIDE OF RIGHT FENDER
EB	30	FRONT SIDE OF LEFT FENDER
ID	32	LEFT KICK PANEL
IE	32	RIGHT KICK PANEL
BG	34	LOWER BACK PANEL CENTER

⯃ : SPLICE POINTS

CODE	SEE PAGE	WIRE HARNESS WITH SPLICE POINTS	CODE	SEE PAGE	WIRE HARNESS WITH SPLICE POINTS
I 1	32	COWL WIRE	**I12**	32	COWL WIRE
I 7					

C11 BLUE

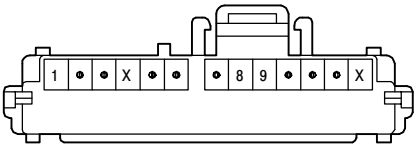

C14 BLACK

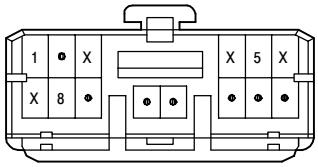

F 1, F 2 GRAY

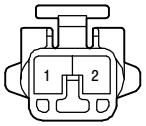

F11

(SEE PAGE 20)

H 9 BLACK

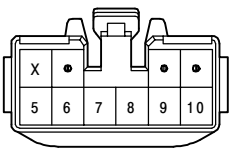

J 2 BLUE

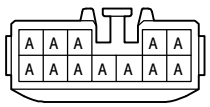

(HINT : SEE PAGE 7)

J 7 BLUE

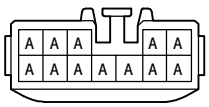

(HINT : SEE PAGE 7)

R 8, R 9

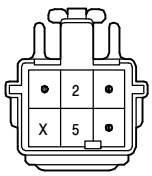

T 5 (A) BLACK

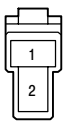

T 6 (B) BLACK

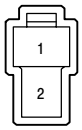

LIGHT AUTO TURN OFF

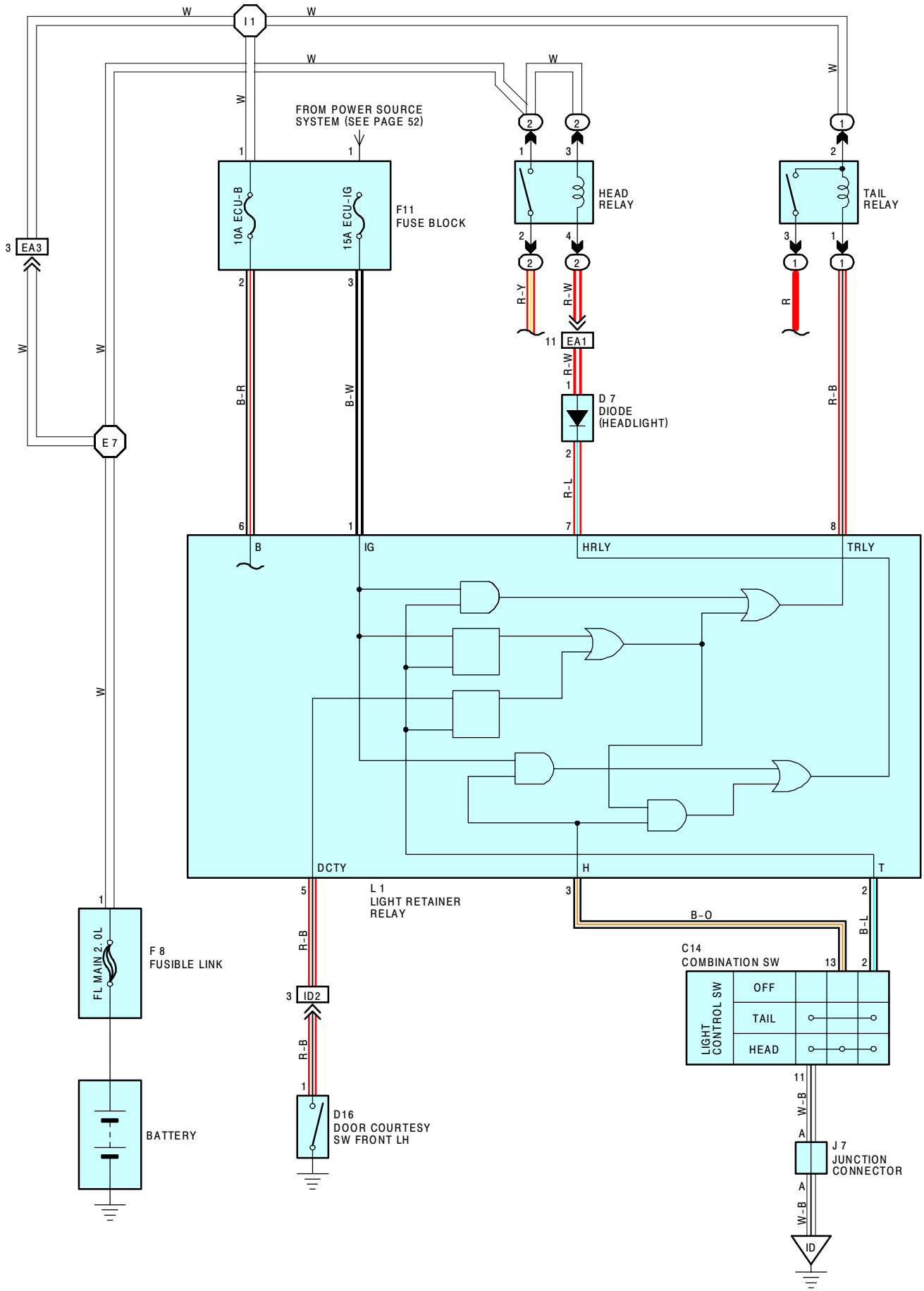

SYSTEM OUTLINE

WITH THE IGNITION SW TURNED ON, THE CURRENT FLOWS TO **TERMINAL 1** OF THE LIGHT RETAINER RELAY THROUGH **ECU-IG** FUSE.

VOLTAGE IS APPLIED AT ALL TIMES TO **TERMINAL 8** OF THE LIGHT RETAINER RELAY THROUGH THE TAIL RELAY (COIL SIDE), AND TO **TERMINAL 7** OF THE LIGHT RETAINER RELAY THROUGH THE HEAD RELAY (COIL SIDE).

1. NORMAL LIGHTING OPERATION

<TURN TAILLIGHT ON>

WITH THE LIGHT CONTROL SW TURNED TO **TAIL** POSITION, A SIGNAL IS INPUT INTO **TERMINAL 2** OF THE LIGHT RETAINER RELAY.

ACCORDING TO THIS SIGNAL, THE CURRENT FLOW TO **TERMINAL 8** OF THE RELAY FLOWS THROUGH **TERMINAL 2** TO **TERMINAL 2** OF THE LIGHT CONTROL SW → **TERMINAL 11** → **GROUND**, CAUSING TAILLIGHTS TO TURN ON.

<TURN HEADLIGHT ON>

WITH THE LIGHT CONTROL SW TURNED TO **HEAD** POSITION, A SIGNAL IS INPUT INTO **TERMINAL 3** OF THE LIGHT RETAINER RELAY. ACCORDING TO THIS SIGNAL, THE CURRENT FLOW TO **TERMINAL 7** OF THE RELAY FLOWS THROUGH **TERMINAL 3** TO T**ERMINAL 13** OF THE LIGHT CONTROL SW → **TERMINAL 11** → **GROUND**, CAUSING HEADLIGHTS AND TAILLIGHTS TO TURN ON. THE TAILLIGHT CIRCUIT IS SAME AS ABOVE (SEE <TURN TAILLIGHT ON>).

2. LIGHT AUTO TURN OFF OPERATION

WITH THE LIGHTS ON AND THE IGNITION SW TURNED OFF (INPUT SIGNAL GOES TO **TERMINAL 1** OF THE LIGHT RETAINER RELAY), WHEN THE DOOR OF DRIVER'S SIDE IS OPENED (INPUT SIGNAL GOES TO **TERMINAL 5** OF THE LIGHT RETAINER RELAY), THE RELAY OPERATES, AND THE CURRENT IS CUT OFF WHICH FLOWS FROM **TERMINAL 8** OF THE RELAY TO **TERMINAL 2** AND FROM **TERMINAL 7** OF THE RELAY TO **TERMINAL 3.** AS A RESULT, ALL LIGHTS ARE TURNED OFF AUTOMATICALLY.

SERVICE HINTS

L 1 LIGHT RETAINER RELAY

1-GROUND : APPROX. **12** VOLTS WITH THE IGNITION SW AT **ON** POSITION
6-GROUND : ALWAYS APPROX. **12** VOLTS
5-GROUND : CONTINUITY WITH THE DRIVER'S DOOR OPEN
7-GROUND : ALWAYS APPROX. **12** VOLTS
8-GROUND : ALWAYS APPROX. **12** VOLTS
3-GROUND : CONTINUITY WITH THE LIGHT CONTROL SW AT **HEAD** POSITION
2-GROUND : CONTINUITY WITH THE LIGHT CONTROL SW AT **TAIL** OR **HEAD** POSITION

: PARTS LOCATION

CODE	SEE PAGE	CODE	SEE PAGE	CODE	SEE PAGE
C14	24	**F 8**	22	**L 1**	25
D 7	24	**F11**	25		
D16	26	**J 7**	25		

: RELAY BLOCKS

CODE	SEE PAGE	RELAY BLOCKS (RELAY BLOCK LOCATION)
1	20	R/B NO. 1 (LEFT KICK PANEL)
2	18	R/B NO. 2 (FRONT SIDE OF LEFT FENDER)

: CONNECTOR JOINING WIRE HARNESS AND WIRE HARNESS

CODE	SEE PAGE	JOINING WIRE HARNESS AND WIRE HARNESS (CONNECTOR LOCATION)
EA1	30	COWL WIRE AND ENGINE ROOM MAIN WIRE (LEFT FENDER)
EA3		
1D2	32	COWL WIRE AND FLOOR NO. 1 WIRE (LEFT KICK PANEL)

: GROUND POINTS

CODE	SEE PAGE	GROUND POINTS LOCATION
ID	32	LEFT KICK PANEL

: SPLICE POINTS

CODE	SEE PAGE	WIRE HARNESS WITH SPLICE POINTS	CODE	SEE PAGE	WIRE HARNESS WITH SPLICE POINTS
E 7	30	ENGINE ROOM MAIN WIRE	**I 1**	32	COWL WIRE

LIGHT AUTO TURN OFF

C14 BLACK

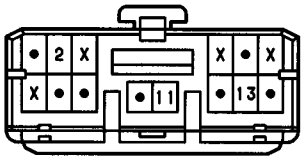

D 7 ORANGE

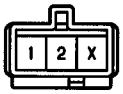

D16 BLUE

F 8

F11

(SEE PAGE 20)

J 7 BLUE

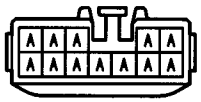

(HINT:SEE PAGE 7)

L 1

FRONT WIPER AND WASHER

C15 BLACK

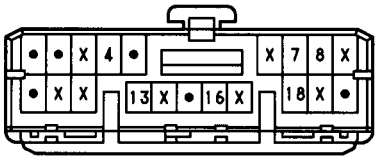

D 6 GRAY

F 3 GRAY

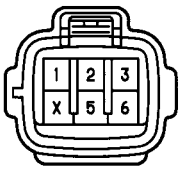

F11

(SEE PAGE 20)

J 7 BLUE

(HINT:SEE PAGE 7)

J 8 BLUE

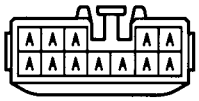

(HINT:SEE PAGE 7)

W 2 BLACK

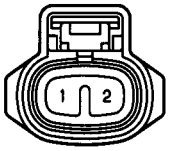

FRONT WIPER AND WASHER

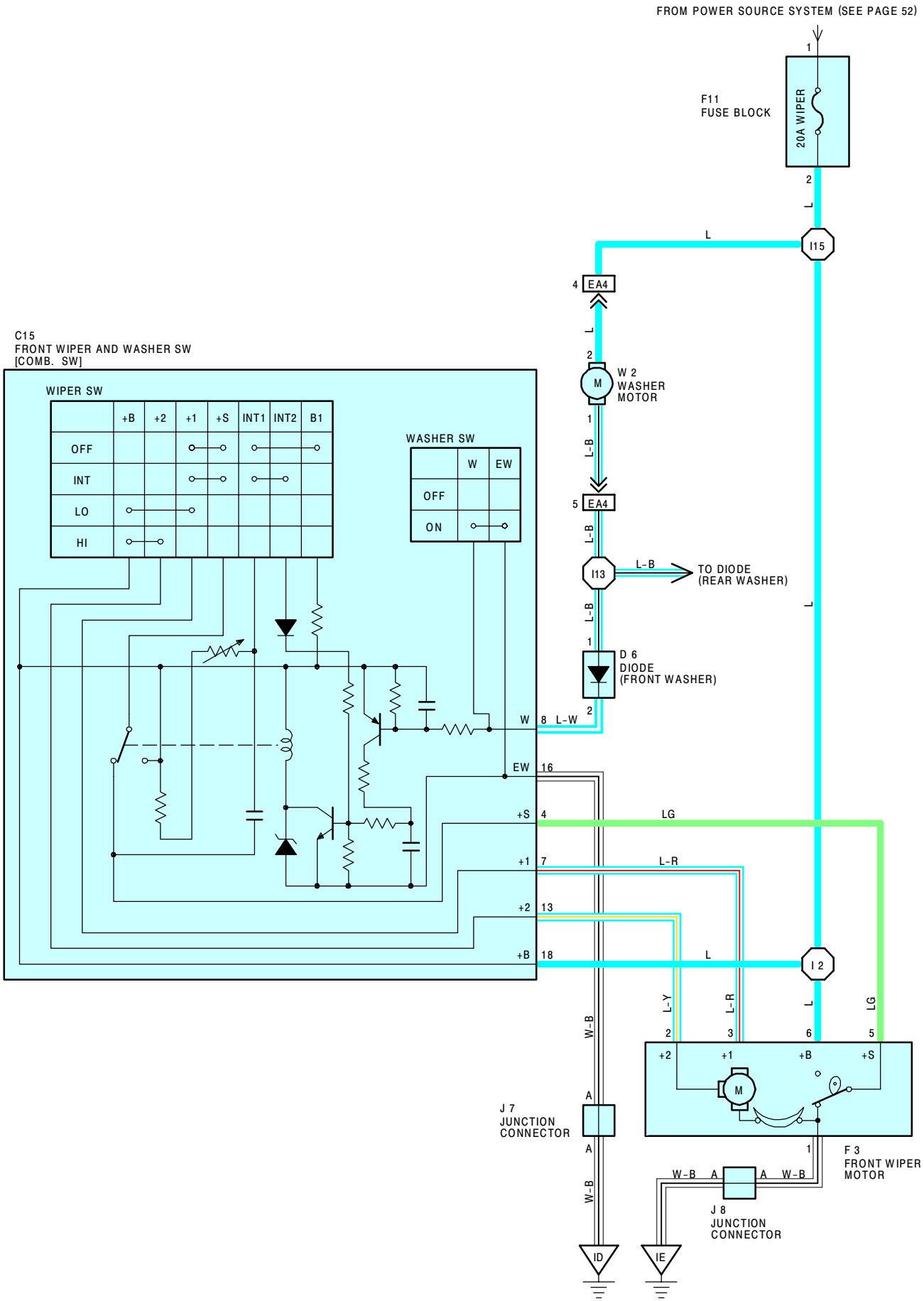

SYSTEM OUTLINE

WITH THE IGNITION SW TURNED ON, THE CURRENT FLOWS TO **TERMINAL 18** OF THE FRONT WIPER AND WASHER SW, **TERMINAL 2** OF THE WASHER MOTOR AND **TERMINAL 6** OF THE FRONT WIPER MOTOR FROM THE **WIPER** FUSE.

1. LOW SPEED POSITION

WITH THE WIPER SW TURNED TO **LO** POSITION, THE CURRENT FLOWS FROM **TERMINAL 18** OF THE FRONT WIPER AND WASHER SW TO **TERMINAL 7** → **TERMINAL 3** OF THE FRONT WIPER MOTOR → **TERMINAL 1** → **GROUND,** CAUSING THE WIPER MOTOR TO RUN AT LOW SPEED.

2. HIGH SPEED POSITION

WITH THE WIPER SW TURNED TO **HI** POSITION, THE CURRENT FLOWS FROM **TERMINAL 18** OF THE FRONT WIPER AND WASHER SW TO **TERMINAL 13** → **TERMINAL 2** OF THE FRONT WIPER MOTOR → **TERMINAL 1** → **GROUND,** CAUSING THE WIPER MOTOR TO RUN AT HIGH SPEED.

3. INT POSITION

WITH THE WIPER SW TURNED TO **INT** POSITION, THE RELAY OPERATES AND THE CURRENT WHICH IS CONNECTED BY RELAY FUNCTION FLOWS FROM **TERMINAL 18** OF THE FRONT WIPER AND WASHER SW TO **TERMINAL 16** → **GROUND.** THIS FLOW OF THE CURRENT OPERATES THE INTERMITTENT CIRCUIT AND THE CURRENT FLOWS FROM **TERMINAL 18** OF THE FRONT WIPER AND WASHER SW TO **TERMINAL 7** → **TERMINAL 3** OF THE FRONT WIPER MOTOR → **TERMINAL 1** → **GROUND** AND FUNCTIONS.

THE INTERMITTENT OPERATION IS CONTROLLED BY A CONDENSER'S CHARGED AND DISCHARGED FUNCTION INSTALLED IN RELAY.

4. WASHER CONTINUOUS OPERATION

WITH THE WASHER SW TURNED TO ON, THE CURRENT FLOWS THROUGH **TERMINAL 2** OF THE WASHER MOTOR TO **TERMINAL 1** → **TERMINAL 8** OF THE FRONT WIPER AND WASHER SW → **TERMINAL 16** → **GROUND,** CAUSING THE WASHER MOTOR TO RUN, AND WINDOW WASHER EMITS A WATER SPRAY. THIS CAUSES A CURRENT TO FLOW TO **TERMINAL 18** OF THE FRONT WIPER AND WASHER SW → **TERMINAL 7** → **TERMINAL 3** OF THE FRONT WIPER MOTOR → **TERMINAL 1** → **GROUND.**

WHILE THE WASHER SW IS ON, WINDOW WASHER KEEPS EMITTING SPRAYS AND FRONT WIPER KEEPS FUNCTIONING.

SERVICE HINTS

C15 FRONT WIPER AND WASHER SW [COMB. SW]

16-GROUND : ALWAYS CONTINUITY
18-GROUND : APPROX. **12** VOLTS WITH THE IGNITION SW AT **ON** POSITION
7-GROUND : APPROX. **12** VOLTS WITH THE WIPER AND WASHER SW AT **LO** POSITION
: APPROX. **12** VOLTS EVERY APPROX. **1** TO **10** SECONDS INTERMITTENTLY WITH THE WIPER SW AT **INT** POSITION
4-GROUND : APPROX. **12** VOLTS WITH THE IGNITION SW ON UNLESS THE WIPER MOTOR AT **STOP** POSITION
13-GROUND : APPROX. **12** VOLTS WITH THE WIPER AND WASHER SW AT **HI** POSITION

F 3 FRONT WIPER MOTOR

5-6 : CLOSED UNLESS THE WIPER MOTOR AT **STOP** POSITION

○ : PARTS LOCATION

CODE	SEE PAGE	CODE	SEE PAGE	CODE	SEE PAGE
C15	24	**F11**	25	**W 2**	23
D 6	24	**J 7**	25		
F 3	22	**J 8**	25		

▭ : CONNECTOR JOINING WIRE HARNESS AND WIRE HARNESS

CODE	SEE PAGE	JOINING WIRE HARNESS AND WIRE HARNESS (CONNECTOR LOCATION)
EA4	30	COWL WIRE AND ENGINE ROOM MAIN WIRE (RIGHT FENDER)

▽ : GROUND POINTS

CODE	SEE PAGE	GROUND POINTS LOCATION
ID	32	LEFT KICK PANEL
IE	32	RIGHT KICK PANEL

⯃ : SPLICE POINTS

CODE	SEE PAGE	WIRE HARNESS WITH SPLICE POINTS	CODE	SEE PAGE	WIRE HARNESS WITH SPLICE POINTS
I 2	32	COWL WIRE	**I15**	32	COWL WIRE
I13					

REAR WIPER AND WASHER

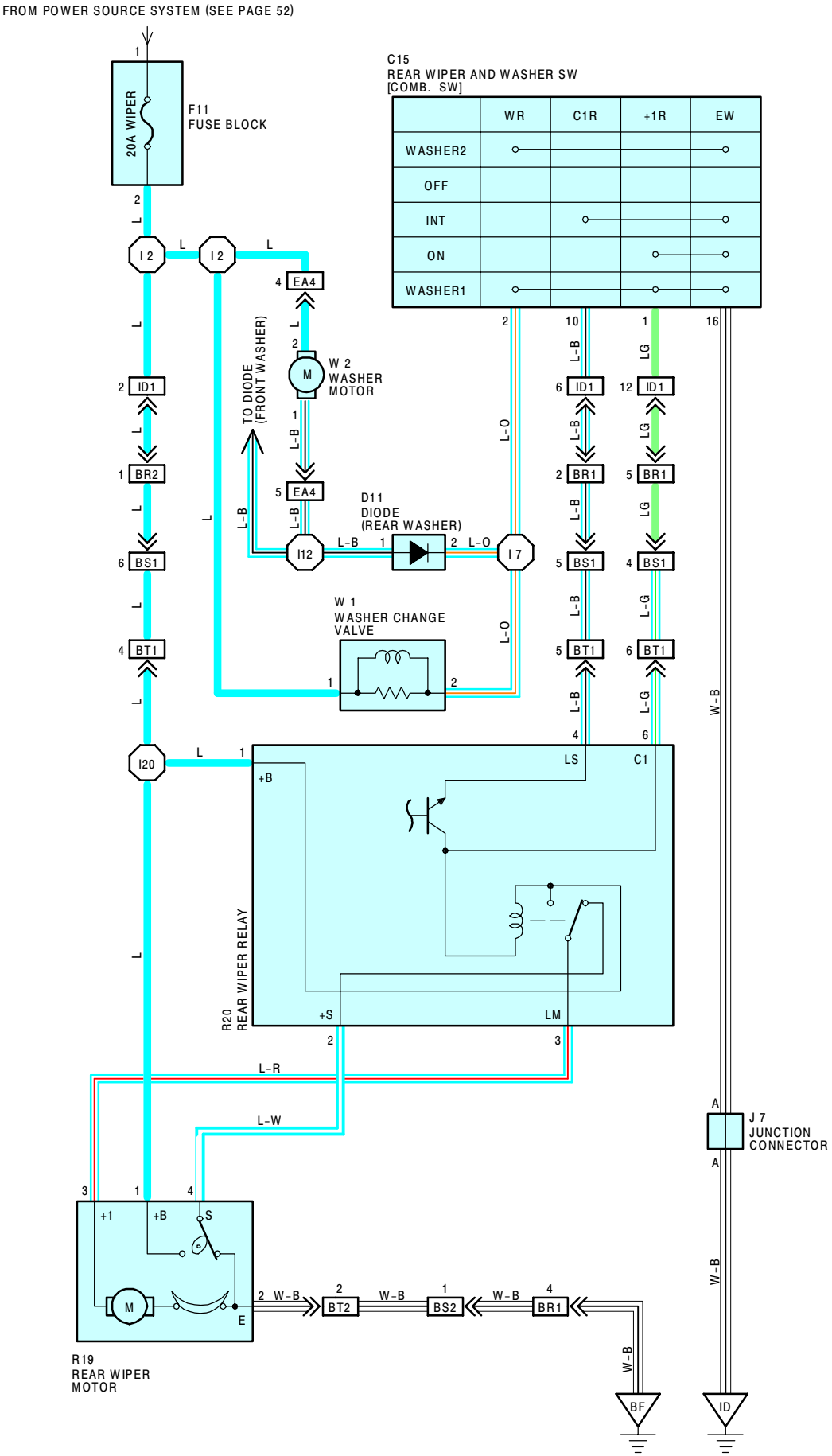

SYSTEM OUTLINE

WHEN THE IGNITION SW IS TURNED ON, THE CURRENT FLOWS TO **TERMINAL 2** OF THE WASHER MOTOR, **TERMINAL 1** OF THE WASHER CHANGE VALVE, **TERMINAL 1** OF THE REAR WIPER RELAY AND **TERMINAL 1** OF THE REAR WIPER MOTOR FROM THE **WIPER** FUSE.

1. REAR WIPER NORMAL OPERATION

WITH THE IGNITION SW TURNED ON AND THE REAR WIPER AND WASHER SW TURNED ON, THE CURRENT FROM **TERMINAL 1** OF THE REAR WIPER RELAY FLOWS TO **TERMINAL 6** OF THE RELAY → **TERMINAL 1** OF THE REAR WIPER AND WASHER SW → **TERMINAL 16** → **GROUND.** THUS, THE RELAY COIL IS ACTIVATED, AND THE CURRENT FROM **TERMINAL 1** OF THE RELAY FLOWS TO **TERMINAL 3** → **TERMINAL 3** OF THE REAR WIPER MOTOR → **TERMINAL 2** → **GROUND,** CAUSING THE MOTOR TO ROTATE TO OPERATE REAR WIPER.

2. REAR WIPER INTERMITTENT OPERATION

WITH THE IGNITION SW TURNED ON AND THE REAR WIPER AND WASHER SW TURNED TO **INT** POSITION, THE CURRENT FROM **TERMINAL 1** OF THE REAR WIPER RELAY FLOWS TO **TERMINAL 4** OF THE RELAY → **TERMINAL 10** OF THE REAR WIPER AND WASHER SW → **TERMINAL 16** → **GROUND,** AS A RESULT, THE RELAY OPERATES FOR APPROX**. 6** - **10** SEC., AND THE CURRENT FLOWS FROM **TERMINAL 1** OF THE REAR WIPER RELAY TO **TERMINAL 3** → **TERMINAL 3** OF THE REAR WIPER MOTOR → **TERMINAL 2** → **GROUND**, CAUSING THE MOTOR TO ROTATE TO OPERATE THE REAR WIPER. AT THIS TIME**,** THE CONTACT IN THE WIPER MOTOR CLOSES, AND THE CURRENT FLOWS FROM **TERMINAL 1** OF THE REAR WIPER MOTOR TO **TERMINAL 4** → **TERMINAL 2** OF THE REAR WIPER RELAY → **TERMINAL 3** → **TERMINAL 3** OF THE REAR WIPER MOTOR → **TERMINAL 2** → **GROUND.**

THUS, THE INTERMITTENT-STOP CURRENT OPERATES, THE CONDENSER IN THE CIRCUIT CHARGES AND THE WIPER CONTINUES TO OPERATE UNTIL REACHING THE **STOP** POSITION. AFTER THE WIPER STOPS, THE CURRENT DOES NOT FLOW TO THE INTERMITTENT-STOP CIRCUIT FROM **TERMINAL 2** OF THE RELAY, BUT THE CONDENSER DISCHARGES THE CURRENT INTO THE INTERMITTENT CIRCUIT AND THE CIRCUIT OPERATES UNTIL THE CONDENSER DISCHARGE ENDS. AS, A RESULT, THIS DISCHARGE INTERVAL BECOMES THE INTERMITTENT TIME.

WHEN THE CURRENT IS DISCHARGED COMPLETELY, THE CURRENT FROM **TERMINAL 1** OF THE RELAY FLOWS TO **TERMINAL 4** → **TERMINAL10** OF THE REAR WIPER AND WASHER SW → **TERMINAL 16** → **GROUND.**

THEN, THE CURRENT FROM **TERMINAL 1** OF THE RELAY FLOWS TO **TERMINAL 3** → **TERMINAL 3** OF THE REAR WIPER MOTOR→ **TERMINAL 2** → **GROUND,** ROTATING THE MOTOR. ACCORDING TO REPETITION OF THIS PROCESS**,** INTERMITTENT OPERATION OF THE REAR WIPER OCCURS.

3. WASHER OPERATION

WITH THE IGNITION SW TURNED ON AND THE REAR WIPER AND WASHER SW TURNED TO **ON** OR **INT** POSITION, WHEN THE WIPER SW IS PUSHED STRONGLY TOWARD THE ON OR INT SIDE, THE CURRENT FROM **TERMINAL 2** OF THE WASHER MOTOR FLOWS TO **TERMINAL 1** OF THE MOTOR → **TERMINAL 2** OF THE REAR WIPER SW → **TERMINAL 16** → **GROUND,** SO THAT THE WASHER MOTOR ROTATES AND THE WINDOW WASHER EMITS A WATER SPRAY, ONLY WHILE THE WIPER SW IS PRESSED. AT THE SAME TIME, THE WASHER CHANGE VALVE OPERATES**.**

WHEN THE CURRENT FLOWS TO THE WASHER CHANGE VALVE, THE WASHER CHANGE VALVE IS ACTIVATED AND WASHER EMITS A WATER SPRAY ON THE REAR WINDOW.

SERVICE HINTS

W 2 WASHER MOTOR

2-GROUND : APPROX. **12** VOLTS WITH THE IGNITION SW AT **ON** POSITION
1-GROUND : CONTINUITY WITH THE WASHER SW TURNED ON

R20 REAR WIPER RELAY

1-GROUND : APPROX. **12** VOLTS WITH THE IGNITION SW AT **ON** POSITION
4-GROUND : CONTINUITY WITH THE REAR WIPER SW AT **INT** POSITION
6-GROUND : CONTINUITY WITH THE REAR WIPER SW AT **ON** POSITION

○ : PARTS LOCATION

CODE	SEE PAGE	CODE	SEE PAGE	CODE	SEE PAGE
C15	24	**J 7**	25	**W 1**	23
D11	24	**R19**	27	**W 2**	23
F11	25	**R20**	27		

□ : CONNECTOR JOINING WIRE HARNESS AND WIRE HARNESS

CODE	SEE PAGE	JOINING WIRE HARNESS AND WIRE HARNESS (CONNECTOR LOCATION)
EA4	30	COWL WIRE AND ENGINE ROOM MAIN WIRE (RIGHT FENDER)
ID1	32	COWL WIRE AND FLOOR NO. 1 WIRE (LEFT KICK PANEL)
BR1	34	LUGGAGE ROOM NO. 1 WIRE AND FLOOR NO. 1 WIRE (LEFT QUARTER PANEL INNER)
BR2		
BS1	34	BACK DOOR NO. 1 WIRE AND LUGGAGE ROOM NO. 1 WIRE (LEFT REAR SIDE OF ROOF)
BS2		
BT1	36	BACK DOOR NO. 1 WIRE AND BACK DOOR NO. 2 WIRE (BACK DOOR LEFT)
BT2		

REAR WIPER AND WASHER

: GROUND POINTS

CODE	SEE PAGE	GROUND POINTS LOCATION
ID	32	LEFT KICK PANEL
BF	34	UNDER THE CENTER CONSOLE BOX

: SPLICE POINTS

CODE	SEE PAGE	WIRE HARNESS WITH SPLICE POINTS	CODE	SEE PAGE	WIRE HARNESS WITH SPLICE POINTS
I 2	32	COWL WIRE	**I12**	32	COWL WIRE
I 7			**I20**		

C15 BLACK

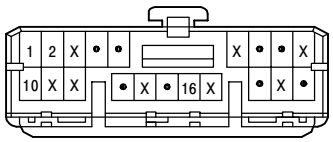

D11 GRAY

F11

(SEE PAGE 20)

J 7 BLUE

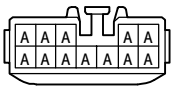

(HINT : SEE PAGE 7)

R19

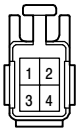

R20

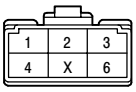

W 1 DARK GRAY

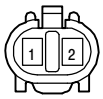

W 2 BLACK

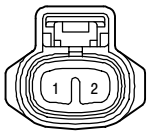

HORN

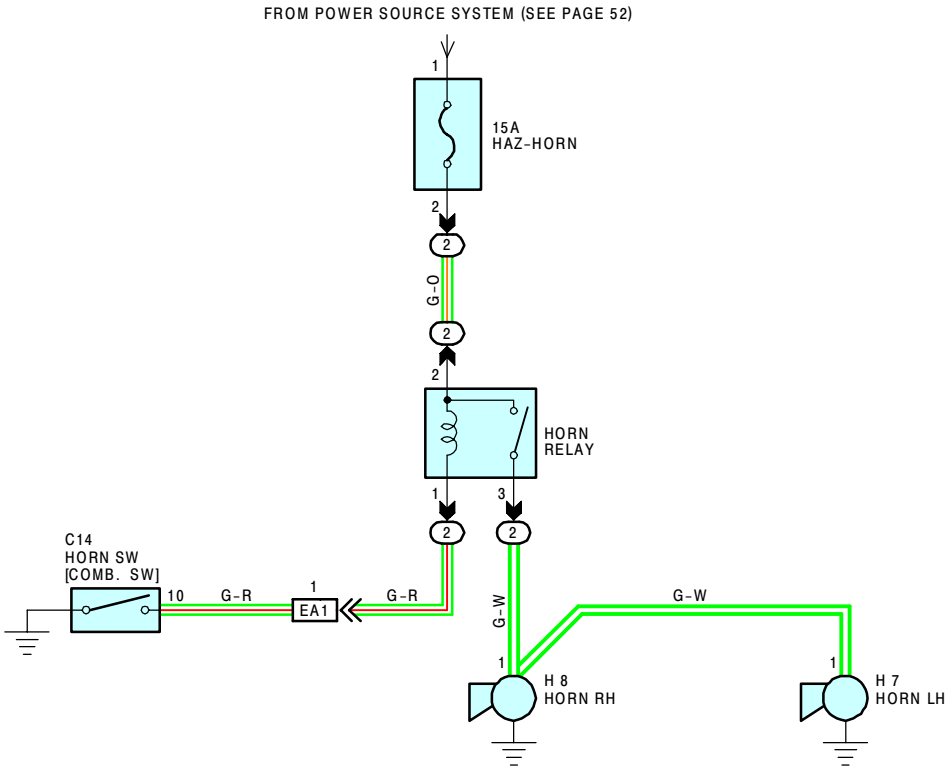

SERVICE HINTS

HORN RELAY

(2) 2- **(2)** 3 : CLOSED WITH THE HORN SW ON

: PARTS LOCATION

CODE	SEE PAGE	CODE	SEE PAGE	CODE	SEE PAGE
C14	24	**H 7**	22	**H 8**	22

: RELAY BLOCKS

CODE	SEE PAGE	RELAY BLOCKS (RELAY BLOCK LOCATION)
2	18	R/B NO. 2 (FRONT SIDE OF LEFT FENDER)

: CONNECTOR JOINING WIRE HARNESS AND WIRE HARNESS

CODE	SEE PAGE	JOINING WIRE HARNESS AND WIRE HARNESS (CONNECTOR LOCATION)
EA1	30	COWL WIRE AND ENGINE ROOM MAIN WIRE (LEFT FENDER)

C14 BLACK

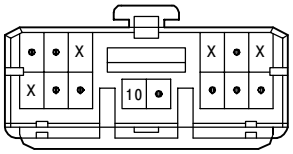

H 7, H 8 BLACK

MOON ROOF

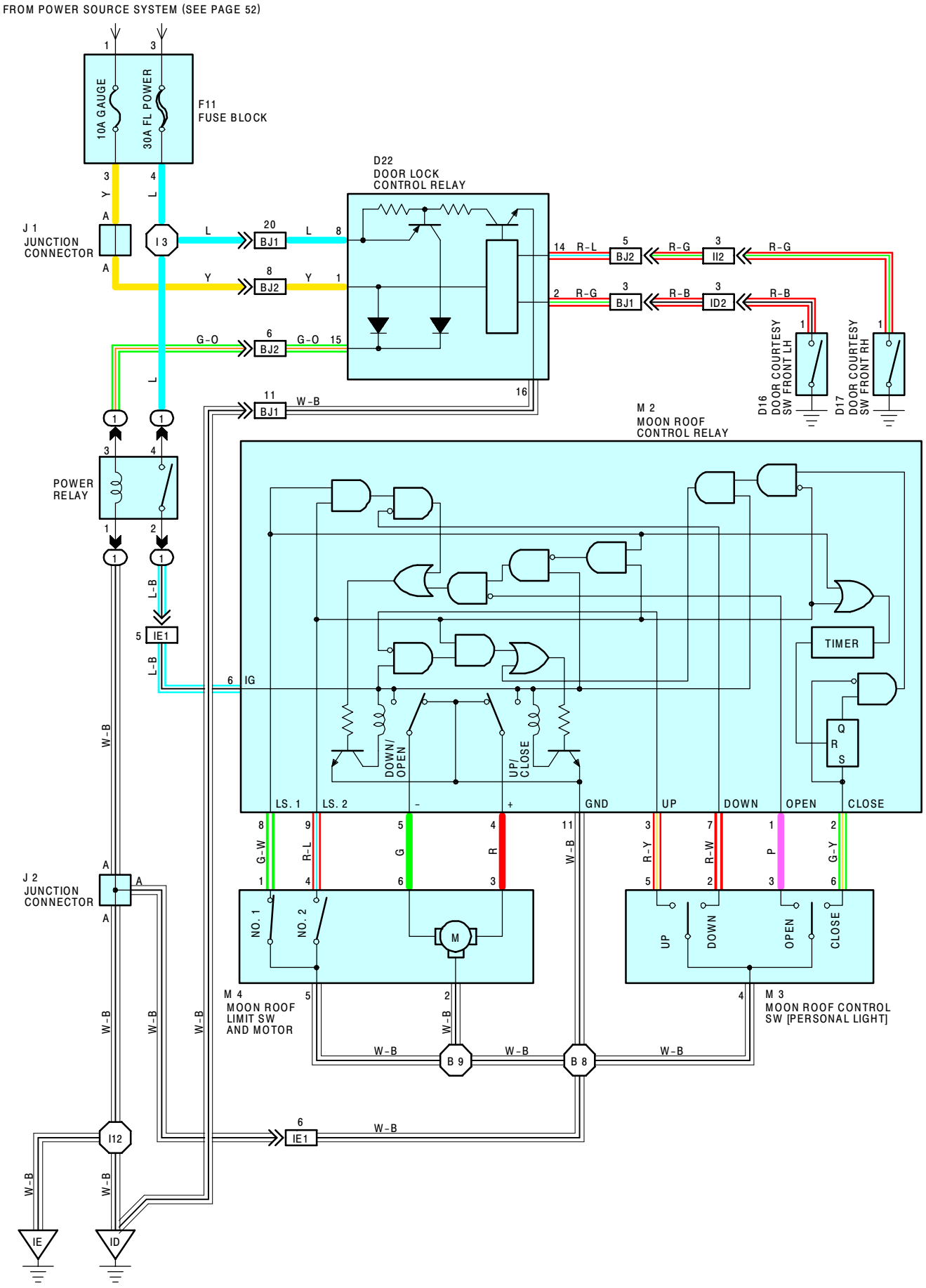
FROM POWER SOURCE SYSTEM (SEE PAGE 52)
10A GAUGE
30A FL POWER
F11
FUSE BLOCK
D22
DOOR LOCK
CONTROL RELAY
J 1
JUNCTION
CONNECTOR
I 3
BJ1
BJ2
II2
ID2
D16
DOOR COURTESY
SW FRONT LH
D17
DOOR COURTESY
SW FRONT RH
M 2
MOON ROOF
CONTROL RELAY
POWER
RELAY
IE1
IG
TIMER
DOWN/
OPEN
UP/
CLOSE
LS. 1
LS. 2
GND
UP
DOWN
OPEN
CLOSE
J 2
JUNCTION
CONNECTOR
NO. 1
NO. 2
M 4
MOON ROOF
LIMIT SW
AND MOTOR
M 3
MOON ROOF CONTROL
SW [PERSONAL LIGHT]
B 9
B 8
I12
IE
ID

SYSTEM OUTLINE

CURRENT IS APPLIED AT ALL TIMES THROUGH **FL POWER** FUSE TO **TERMINAL 4** OF THE POWER RELAY.

WITH THE IGNITION SW TURNED ON, THE CURRENT FLOWS FROM **TERMINAL 3** OF THE POWER RELAY TO **TERMINAL 1** → **GROUND** THROUGH **GAUGE** FUSE. AS A RESULT, THE POWER RELAY IS ACTIVATED AND THE CURRENT TO **TERMINAL 4** OF THE POWER RELAY FLOWS FROM **TERMINAL 2** OF THE RELAY TO **TERMINAL 6** OF THE MOON ROOF CONTROL RELAY.

1. SLIDE OPEN OPERATION

WHEN THE IGNITION SW IS TURNED ON AND THE MOON ROOF CONTROL SW IS PUSHED TO THE **OPEN** POSITION, A SIGNAL IS INPUT FROM **TERMINAL 3** OF THE MOON ROOF CONTROL SW TO **TERMINAL 1** OF THE MOON ROOF CONTROL RELAY. THE MOON ROOF LIMIT SW NO. 2 IS TURNED ON AT THIS TIME.

WHEN THIS OCCURS, THE RELAY IS ACTIVATED AND THE CURRENT TO **TERMINAL 6** OF THE MOON ROOF CONTROL RELAY FLOWS FROM **TERMINAL 5** → **TERMINAL 6** OF THE MOON ROOF MOTOR → **TERMINAL 3** → **TERMINAL 4** OF THE MOON ROOF CONTROL RELAY → **TERMINAL 11** → **GROUND**, ROTATING THE MOTOR TO OPEN THE MOON ROOF WHILE THE SW IS BEING PUSHED TO **OPEN** POSITION.

2. SLIDE OPEN OPERATION

WITH THE IGNITION SW TURNED ON AND THE MOON ROOF COMPLETELY OPEN AND THE MOON ROOF LIMIT SWITCH NO. 1 AND NO. 2 BOTH ARE ON, WHEN THE MOON ROOF CONTROL SW IS PUSHED TO THE **CLOSE** POSITION, A SIGNAL IS INPUT FROM **TERMINAL 6** OF THE MOON ROOF CONTROL SW TO **TERMINAL 2** OF THE MOON ROOF CONTROL RELAY.

WHEN THIS OCCURS, THE RELAY IS ACTIVATED AND THE CURRENT TO **TERMINAL 6** OF THE MOON ROOF CONTROL RELAY FLOWS FROM **TERMINAL 4** → **TERMINAL 3** OF THE MOON ROOF MOTOR → **TERMINAL 6** → **TERMINAL 5** OF THE MOON ROOF CONTROL RELAY → **TERMINAL 11** → **GROUND**, ROTATING THE MOTOR TO CLOSE THE MOON ROOF WHILE THE SW IS BEING PUSHED TO **CLOSE** POSITION.

WHEN THE MOON ROOF LIMIT SW NO. 1 IS TURNED OFF (THE MOON ROOF LIMIT SW NO. 2 IS ON) AND MOON ROOF REACHES **100** MM FROM FULLY **CLOSE** POSITION, SIGNAL IS INPUT FROM **TERMINAL 1** OF THE LIMIT SW NO. 1 TO **TERMINAL 8** OF THE MOON ROOF CONTROL RELAY. THIS SIGNAL ACTIVATES THE RELAY AND STOPS CONTINUITY FROM **TERMINAL 6** OF THE MOON ROOF CONTROL RELAY TO **TERMINAL 11**, AS A RESULT, THE MOON ROOF STOPS AT THIS POSITION.

TO CLOSE THE MOON ROOF COMPLETELY, PUSHING THE MOON ROOF CONTROL SW AGAIN TO THE CLOSE SIDE CAUSES A SIGNAL TO BE INPUT AGAIN TO **TERMINAL 2** OF THE MOON ROOF CONTROL RELAY. THIS ACTIVATES THE RELAY AND THE MOON ROOF WILL CLOSE AS LONG AS THE MOON ROOF CONTROL SW IS BEING PUSHED, ALLOWING THE MOON ROOF TO FULLY CLOSE.

3. TILT UP OPERATION

WHEN THE MOON ROOF CONTROL SW IS PUSHED TO **TILT UP** POSITION, WITH THE IGNITION SW TURNED ON AND THE MOON ROOF COMPLETELY CLOSED (MOON ROOF LIMIT SW NO. 2 IS OFF), A SIGNAL IS INPUT FROM **TERMINAL 5** OF THE MOON ROOF CONTROL SW TO **TERMINAL 3** OF THE MOON ROOF CONTROL RELAY. AS A RESULT, THE RELAY IS ACTIVATED AND THE CURRENT TO **TERMINAL 6** OF THE RELAY FLOWS FROM **TERMINAL 4** OF THE RELAY TO **TERMINAL 3** OF THE MOON ROOF MOTOR → **TERMINAL 6** → **TERMINAL 5** OF THE RELAY → **TERMINAL 11** → **GROUND**, ROTATING THE MOTOR SO THAT TILT UP OPERATION OCCURS AS LONG AS MOON ROOF CONTROL SW IS PUSHED ON THE TILT UP SIDE.

4. TILT DOWN OPERATION

WHEN THE MOON ROOF CONTROL SW IS PUSHED TO **TILT DOWN** POSITION, WITH THE IGNITION SW TURNED ON AND THE MOON ROOF TILTED UP (MOON ROOF LIMIT SW NO. 1 AND NO. 2 ARE BOTH OFF), A SIGNAL IS INPUT FROM **TERMINAL 2** OF THE MOON ROOF CONTROL SW TO **TERMINAL 7** OF THE MOON ROOF CONTROL RELAY.

AS A RESULT, THE RELAY IS ACTIVATED AND THE CURRENT TO **TERMINAL 6** OF THE RELAY FLOWS FROM **TERMINAL 5** OF THE RELAY → **TERMINAL 6** OF THE MOON ROOF MOTOR → **TERMINAL 3** → **TERMINAL 4** OF THE RELAY → **TERMINAL 11** → **GROUND**, ROTATING THE MOTOR SO THAT TILT DOWN OPERATION OCCURS AS LONG AS THE MOON ROOF CONTROL SW IS PUSHED ON THE TILT DOWN SIDE. (DURING TILT DOWN, THE LIMIT SW NO. 1 CHANGES FROM OFF TO ON.)

5. TILT UP REMINDER SYSTEM

WHEN THE IGNITION SW IS TURNED ON TO ACC OR OFF, WITH THE MOON ROOF STILL TILTED UP, THE CURRENT DOES NOT FLOW TO **TERMINAL 6** OF THE MOON ROOF CONTROL RELAY.

THIS IS RECEIVED BY THE RELAY AS A SIGNAL THAT THE IGNITION SW IS TURNED OFF. AT THIS TIME, THE MOON ROOF LIMIT SW NO. 1 AND NO. 2 ARE OFF, SO SIGNALS ARE INPUT TO **TERMINAL 8** AND **9** OF THE MOON ROOF CONTROL RELAY THAT THE MOON ROOF IS IN THE TILT OPERATION POSITION. WHEN THESE SIGNALS ARE INPUT TO THE MOON ROOF CONTROL RELAY, THE TIMER BUILT INTO THE RELAY OPERATES.

6. KEY OFF MOON ROOF OPERATION

WITH THE IGNITION SW TURNED FROM ON TO OFF, THE DOOR LOCK CONTROL RELAY OPERATES AND THE CURRENT FLOWS FROM **FL POWER** FUSE TO **TERMINAL 8** OF THE DOOR LOCK CONTROL RELAY → **TERMINAL 15** → **TERMINAL 3** OF THE POWER RELAY → **TERMINAL 1** → **GROUND**, AT THIS TIME, FOR ABOUT **60** SECONDS THE SAME AS NORMAL OPERATION, THE CURRENT FLOWS FROM **POWER** FUSE → **TERMINAL 4** OF THE POWER RELAY → **TERMINAL 2** → **TERMINAL 6** OF THE MOON ROOF CONTROL RELAY. AS A RESULT, FOR ABOUT **60** SECONDS AFTER THE IGNITION SW IS TURNED OFF, THE FUNCTION OF THIS RELAY MAKES IT POSSIBLE TO OPEN AND CLOSE THE MOON ROOF. ALSO, BY OPENING THE FRONT DOOR (THE DOOR COURTESY SW ON) WITHIN ABOUT **60** SECONDS.

AFTER TURNING THE IGNITION SW TO OFF, A SIGNAL IS INPUT TO **TERMINAL 2** OR **14** OF THE DOOR LOCK CONTROL RELAY. AS A RESULT, THE RELAY TURNS OFF, AND OPEN AND CLOSE MOVEMENT OF THE MOON ROOF STOPS.

Brought to you by BirfMark

MOON ROOF

SERVICE HINTS

POWER RELAY

(1) 4- **(1)** 2 : CLOSED WITH THE IGNITION SW AT **ON** POSITION OR KEY OFF OPERATED

M 2 MOON ROOF CONTROL RELAY

11-GROUND : ALWAYS CONTINUITY

6-GROUND : APPROX. **12** VOLTS WITH THE IGNITION SW AT **ON** POSITION OR KEY OFF OPERATED

4-GROUND : APPROX. **12** VOLTS WITH THE IGNITION SW ON AND MOON ROOF CONTROL SW AT **CLOSE** OR **UP** POSITION (EXCEPT APPROX. **100** MM (**3.941** IN.) **2** SECOND IN THE BEFORE **CLOSED** POSITION)

5-GROUND : APPROX. **12** VOLTS WITH THE IGNITION SW ON AND MOON ROOF CONTROL SW AT **OPEN** OR **DOWN** POSITION

9-GROUND : APPROX. **12** VOLTS → **0** VOLTS WITH FROM OPEN TO CLOSE
0 VOLTS WITH **UP** OR **DOWN** POSITION
0 VOLTS → APPROX**. 12** VOLTS WITH APPROX. **100** MM (**3.941** IN.) 2 SECOND IN THE BEFORE CLOSED POSITION

8-GROUND : **0** VOLTS → APPROX. **12** VOLTS WITH FROM **UP** TO **DOWN**

M 3 MOON ROOF CONTROL SW

5-4 : CLOSED WITH THE MOON ROOF CONTROL SW AT **UP** POSITION

6-4 : CLOSED WITH THE MOON ROOF CONTROL SW AT **CLOSE** POSITION

2-4 : CLOSED WITH THE MOON ROOF CONTROL SW AT **DOWN** POSITION

3-4 : CLOSED WITH THE MOON ROOF CONTROL SW AT **OPEN** POSITION

4-GROUND : ALWAYS CONTINUITY

○ : PARTS LOCATION

CODE	SEE PAGE	CODE	SEE PAGE	CODE	SEE PAGE
D16	26	**F11**	25	**M 2**	26
D17	26	**J 1**	25	**M 3**	26
D22	26	**J 2**	25	**M 4**	26

⬭ : RELAY BLOCKS

CODE	SEE PAGE	RELAY BLOCKS (RELAY BLOCK LOCATION)
1	20	R/B NO. 1 (LEFT KICK PANEL)

▭ : CONNECTOR JOINING WIRE HARNESS AND WIRE HARNESS

CODE	SEE PAGE	JOINING WIRE HARNESS AND WIRE HARNESS (CONNECTOR LOCATION)
ID2	32	COWL WIRE AND FLOOR NO. 1 WIRE (LEFT KICK PANEL)
1E1	32	ROOF WIRE AND COWL WIRE (LEFT KICK PANEL)
II2	32	COWL WIRE AND FLOOR NO. 2 WIRE (RIGHT KICK PANEL)
BJ1	34	FRONT DOOR LH WIRE AND COWL WIRE (LEFT KICK PANEL)
BJ2		

▽ : GROUND POINTS

CODE	SEE PAGE	GROUND POINTS LOCATION
ID	32	LEFT KICK PANEL
IE	32	RIGHT KICK PANEL

⯃ : SPLICE POINTS

CODE	SEE PAGE	WIRE HARNESS WITH SPLICE POINTS	CODE	SEE PAGE	WIRE HARNESS WITH SPLICE POINTS
I 3	32	COWL WIRE	**B 8**	36	ROOF WIRE
I12	32	COWL WIRE	**B 9**		

Brought to you by BirfMark

D16, D17 BLUE

D22 GRAY

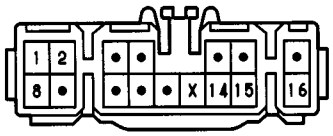

F11

(SEE PAGE 20)

J 1

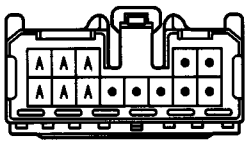

(HINT:SEE PAGE 7)

J 2 BLUE

(HINT:SEE PAGE 7)

M 2

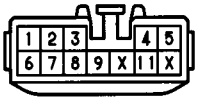

M 3

M 4

Brought to you by BirfMark

CIGARETTE LIGHTER AND CLOCK

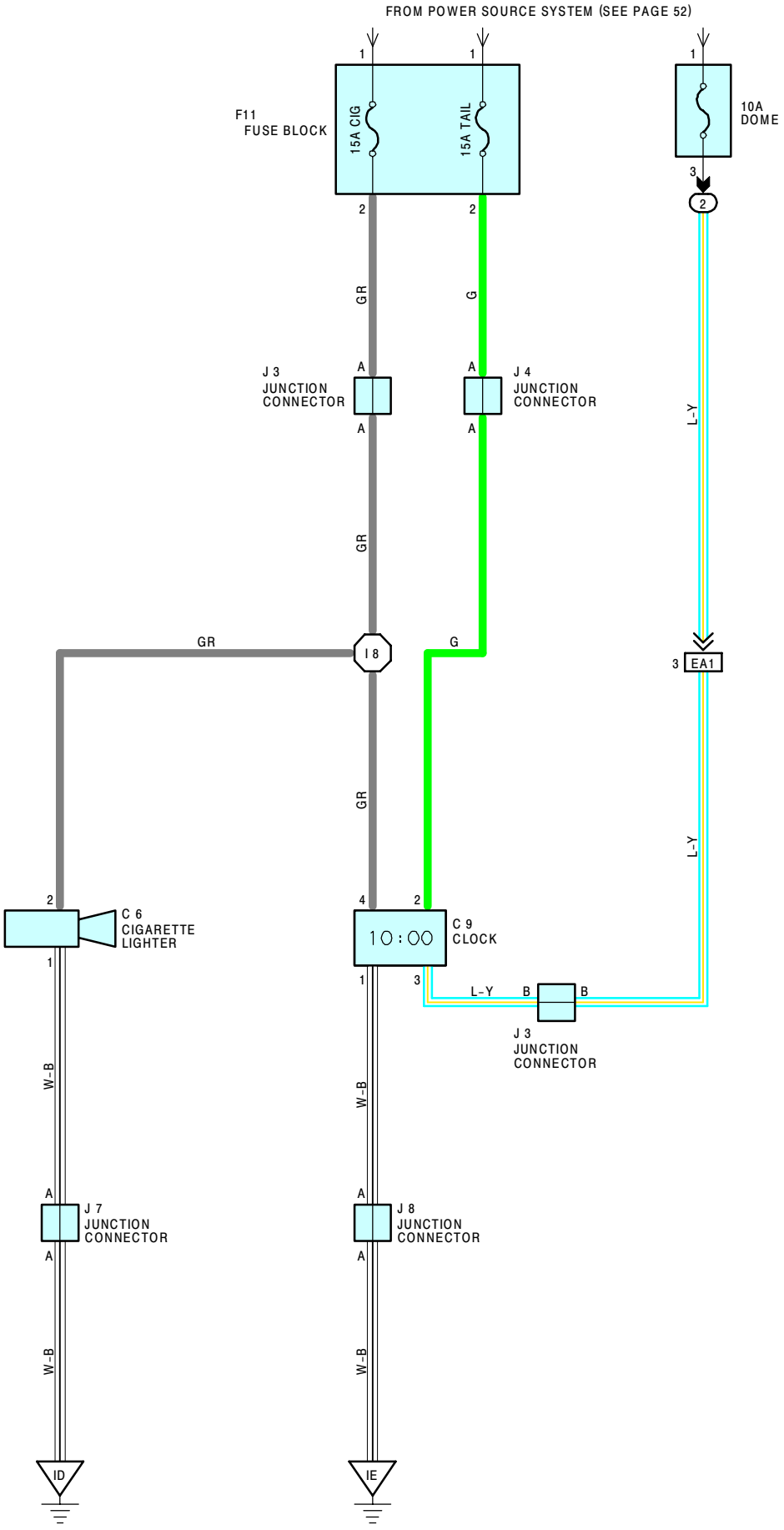

Brought to you by BirfMark

SERVICE HINTS

C 6 CIGARETTE LIGHTER
2-GROUND : APPROX. **12** VOLTS WITH THE IGNITION SW AT **ACC** OR **ON** POSITION
1-GROUND : ALWAYS CONTINUTIY

C 9 CLOCK
3-GROUND : ALWAYS APPROX. **12** VOLTS (POWER FOR CLOCK)
4-GROUND : APPROX. **12** VOLTS WITH THE IGNITION SW AT **ACC** OR **ON** POSITION (POWER FOR INDICATION)
2-GROUND : APPROX **12** VOLTS WITH THE LIGHT CONTROL SW AT **TAIL** OR **HEAD** POSITION
1-GROUND : ALWAYS CONTINUTIY

: PARTS LOCATION

CODE	SEE PAGE	CODE	SEE PAGE	CODE	SEE PAGE
C 6	24	**J 3**	25	**J 8**	25
C 9	24	**J 4**	25		
F11	25	**J 7**	25		

: RELAY BLOCKS

CODE	SEE PAGE	RELAY BLOCKS (RELAY BLOCK LOCATION)
2	18	R/B NO. 2 (FRONT SIDE OF THE LEFT FENDER)

: CONNECTOR JOINING WIRE HARNESS AND WIRE HARNESS

CODE	SEE PAGE	JOINING WIRE HARNESS AND WIRE HARNESS (CONNECTOR LOCATION)
EA1	30	COWL WIRE AND ENGINE ROOM MAIN WIRE (LEFT FENDER)

: GROUND POINTS

CODE	SEE PAGE	GROUND POINTS LOCATION
ID	32	LEFT KICK PANEL
IE	32	RIGHT KICK PANEL

: SPLICE POINTS

CODE	SEE PAGE	WIRE HARNESS WITH SPLICE POINTS	CODE	SEE PAGE	WIRE HARNESS WITH SPLICE POINTS
I 8	32	COWL WIRE			

C 6

C 9

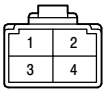

F11

(SEE PAGE 20)

J 3

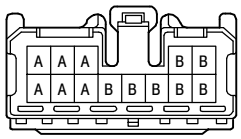

(HINT : SEE PAGE 7)

J 4

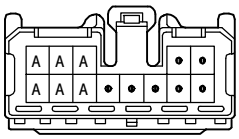

(HINT : SEE PAGE 7)

J 7 BLUE

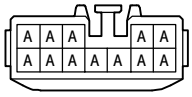

(HINT : SEE PAGE 7)

J 8 BLUE

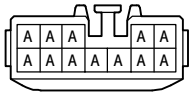

(HINT : SEE PAGE 7)

Brought to you by BirfMark

REMOTE CONTROL MIRROR

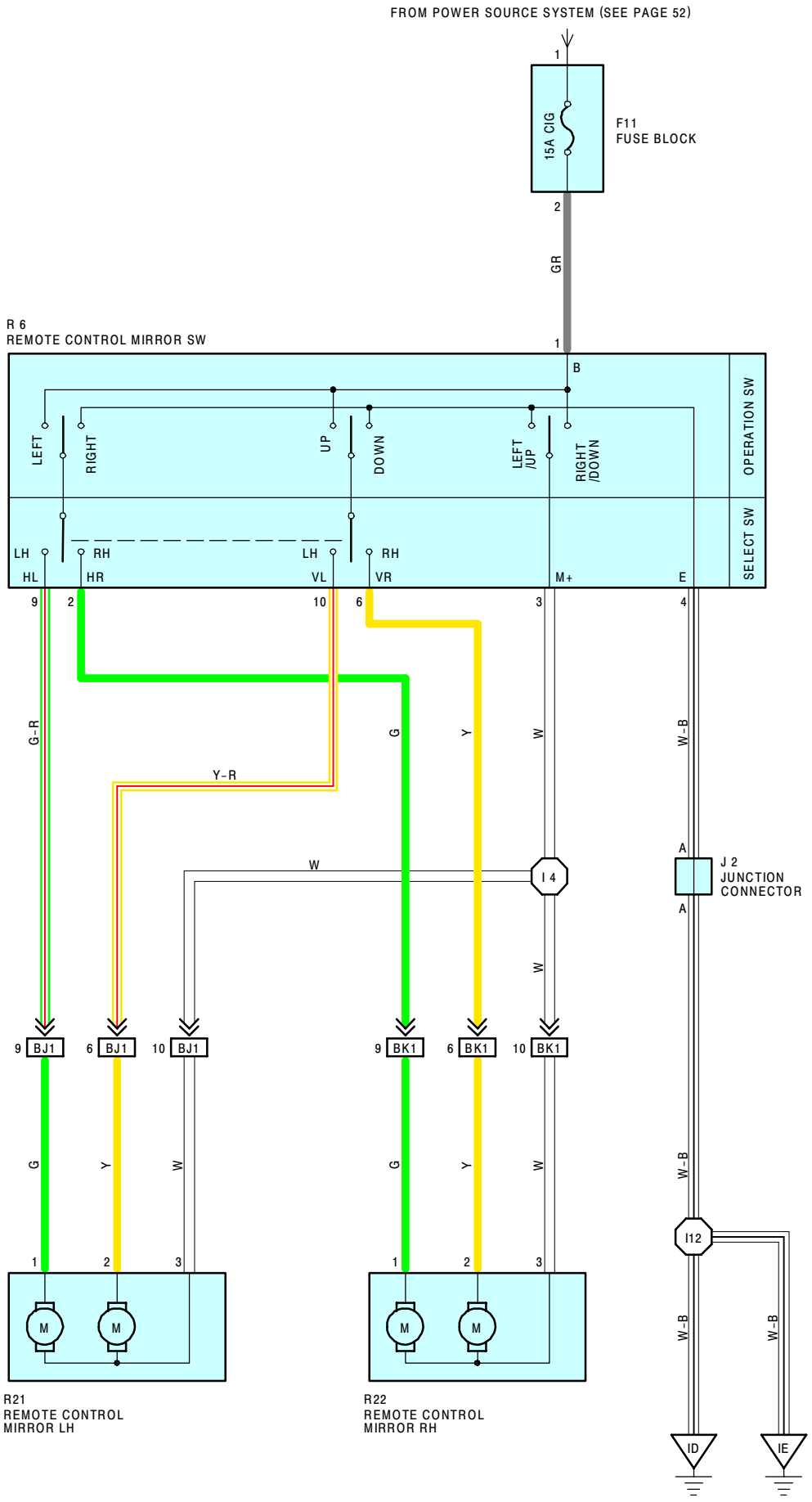

Brought to you by BirfMark

SERVICE HINTS

R 6 REMOTE CONTROL MIRROR SW

1-GROUND : APPROX. **12** VOLTS WITH THE IGNITION SW AT **ACC** ON **ON** POSITION
3-4 : CONTINUITY WITH THE OPERATION SW AT **UP** OR **LEFT** POSITION
9-4 : CONTINUITY WITH THE OPERATION SW AT **RIGHT** POSITION AND THE SELECT SW AT **LH** POSITION
10-4 : CONTINUITY WITH THE OPERATION SW AT **DOWN** POSITION AND THE SELECT SW AT **LH** POSITION
2-4 : CONTINUITY WITH THE OPERATION SW AT **RIGHT** POSITION AND THE SELECT SW AT **RH** POSITION
6-4 : CONTINUITY WITH THE OPERATION SW AT **DOWN** POSITION AND THE SELECT SW AT **RH** POSITION

○ : PARTS LOCATION

CODE	SEE PAGE	CODE	SEE PAGE	CODE	SEE PAGE
F11	25	**R 6**	25	**R22**	27
J 2	25	**R21**	27		

▭ : CONNECTOR JOINING WIRE HARNESS AND WIRE HARNESS

CODE	SEE PAGE	JOINING WIRE HARNESS AND WIRE HARNESS (CONNECTOR LOCATION)
BJ1	34	FRONT DOOR LH WIRE AND COWL WIRE (LEFT KICK PANEL)
BK1	34	FRONT DOOR RH WIRE AND COWL WIRE (RIGHT KICK PANEL)

▽ : GROUND POINTS

CODE	SEE PAGE	GROUND POINTS LOCATION
ID	32	LEFT KICK PANEL
IE	32	RIGHT KICK PANEL

⬡ : SPLICE POINTS

CODE	SEE PAGE	WIRE HARNESS WITH SPLICE POINTS	CODE	SEE PAGE	WIRE HARNESS WITH SPLICE POINTS
I 4	32	COWL WIRE	**I12**	32	COWL WIRE

F11

(SEE PAGE 20)

J 2 BLUE

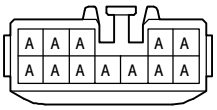

(HINT : SEE PAGE 7)

R 6

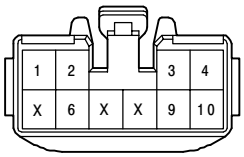

R21, R22

SHIFT LOCK

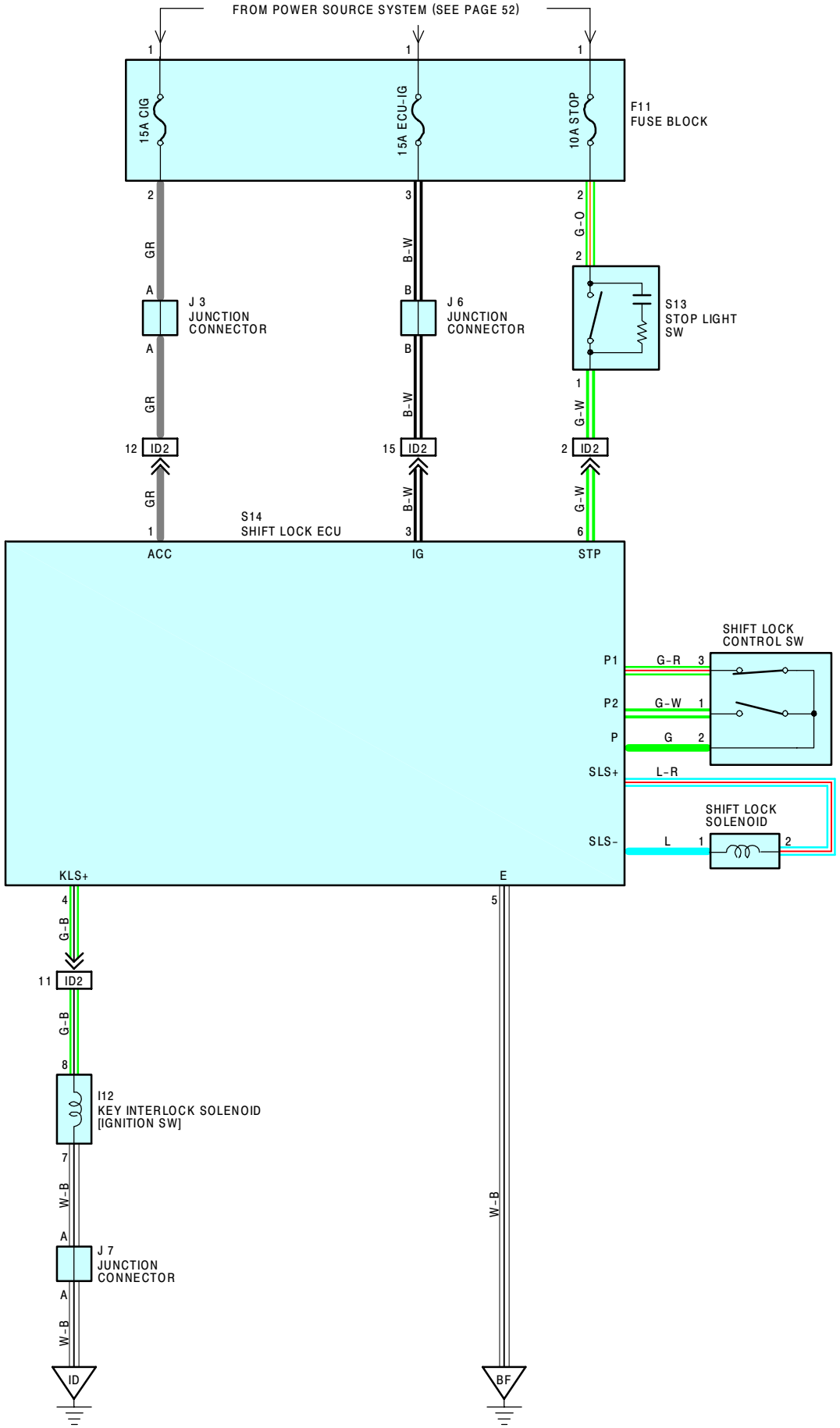
FROM POWER SOURCE SYSTEM (SEE PAGE 52)
15A CIG
15A ECU-IG
10A STOP
F11
FUSE BLOCK
GR
B-W
G-O
J 3
JUNCTION
CONNECTOR
J 6
JUNCTION
CONNECTOR
S13
STOP LIGHT
SW
G-W
ID2
S14
SHIFT LOCK ECU
ACC
IG
STP
SHIFT LOCK
CONTROL SW
P1
P2
P
G-R
G-W
G
SLS+
L-R
SHIFT LOCK
SOLENOID
SLS-
L
KLS+
E
G-B
I12
KEY INTERLOCK SOLENOID
[IGNITION SW]
W-B
J 7
JUNCTION
CONNECTOR
ID
BF

SYSTEM OUTLINE

WHEN THE IGNITION SW IS TURNED TO **ACC** POSITION THE CURRENT FROM THE **CIG** FUSE FLOWS TO **TERMINAL 1** OF THE SHIFT LOCK ECU. AT THE **ON** POSITION, THE CURRENT FROM THE **ECU- IG** FUSE FLOWS TO **TERMINAL 3** OF THE SHIFT LOCK ECU.

1. SHIFT LOCK MECHANISM

WITH THE IGNITION SW ON, WHEN A SIGNAL THAT BRAKE PEDAL IS DEPRESSED (THE STOP LIGHT SW ON) AND A SIGNAL THAT SHIFT LEVER IS PUT IN **"P"** POSITION (CONTINUITY BETWEEN P1 AND P OF THE SHIFT POSITION SW) IS INPUT TO THE SHIFT LOCK ECU. THE SHIFT LOCK ECU OPERATES AND THE CURRENT FLOWS FROM **TERMINAL 3** OF THE SHIFT LOCK ECU → **TERMINAL SLS+** → **TERMINAL 2** OF THE SHIFT LOCK SOLENOID → SOLENOID → **TERMINAL 1** → **TERMINAL SLS-** OF THE SHIFT LOCK ECU → **TERMINAL 5** → **GROUND**. THIS CAUSES THE SHIFT LOCK SOLENOID TO TURN ON (PLATE STOPPER DISENGAGES), AND SHIFT LEVER CAN BE SHIFTED INTO OTHER POSITION THAN THE **"P"** POSITION.

2. KEY INTER LOCK MECHANISM

WITH THE IGNITION SW AT **ON** OR **ACC** POSITION, WHEN SHIFT LEVER IS PUT IN **"P"** POSITION (NO CONTINUITY BETWEEN P2 AND P OF LOCK CONTROL SW), THE CURRENT FROM **TERMINAL 4** OF THE SHIFT LOCK ECU TO THE KEY INTER LOCK SOLENOID IS CUT OFF. THIS CAUSES THE KEY INTER LOCK SOLENOID TO TURN OFF (LOCK LEVER DISENGAGES FROM LOCK POSITION), AND THE IGNITION KEY CAN BE TURNED FROM **ACC** TO **LOCK** POSITION.

SERVICE HINTS

S14 SHIFT LOCK ECU

1-GROUND : APPROX. **12** VOLTS WITH THE IGNITION SW AT **ACC** OR **ON** POSITION
3-GROUND : APPROX. **12** VOLTS WITH THE IGNITION SW AT **ON** POSITION
5-GROUND : ALWAYS CONTINUITY
6-GROUND : APPROX. **12** VOLTS WITH THE BRAKE PEDAL DEPRESSED (STOP LIGHT SW ON)

○ : PARTS LOCATION

CODE	SEE PAGE	CODE	SEE PAGE	CODE	SEE PAGE
F11	25	**J 6**	25	**S14**	27
I12	25	**J 7**	25		
J 3	25	**S13**	25		

▭ : CONNECTOR JOINING WIRE HARNESS AND WIRE HARNESS

CODE	SEE PAGE	JOINING WIRE HARNESS AND WIRE HARNESS (CONNECTOR LOCATION)
ID2	32	COWL WIRE AND FLOOR NO. 1 WIRE (LEFT KICK PANEL)

▽ : GROUND POINTS

CODE	SEE PAGE	GROUND POINTS LOCATION
ID	32	LEFT KICK PANEL
BF	34	UNDER THE CENTER CONSOLE BOX

F11

(SEE PAGE 20)

I12 BLACK

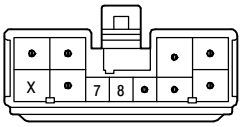

J 3

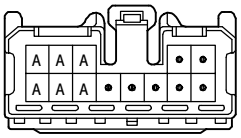

(HINT : SEE PAGE 7)

J 6

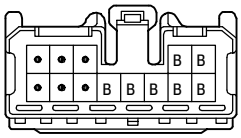

(HINT : SEE PAGE 7)

J 7 BLUE

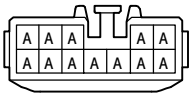

(HINT : SEE PAGE 7)

S13 BLACK

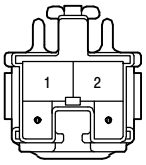

S14

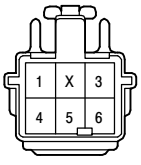

POWER WINDOW

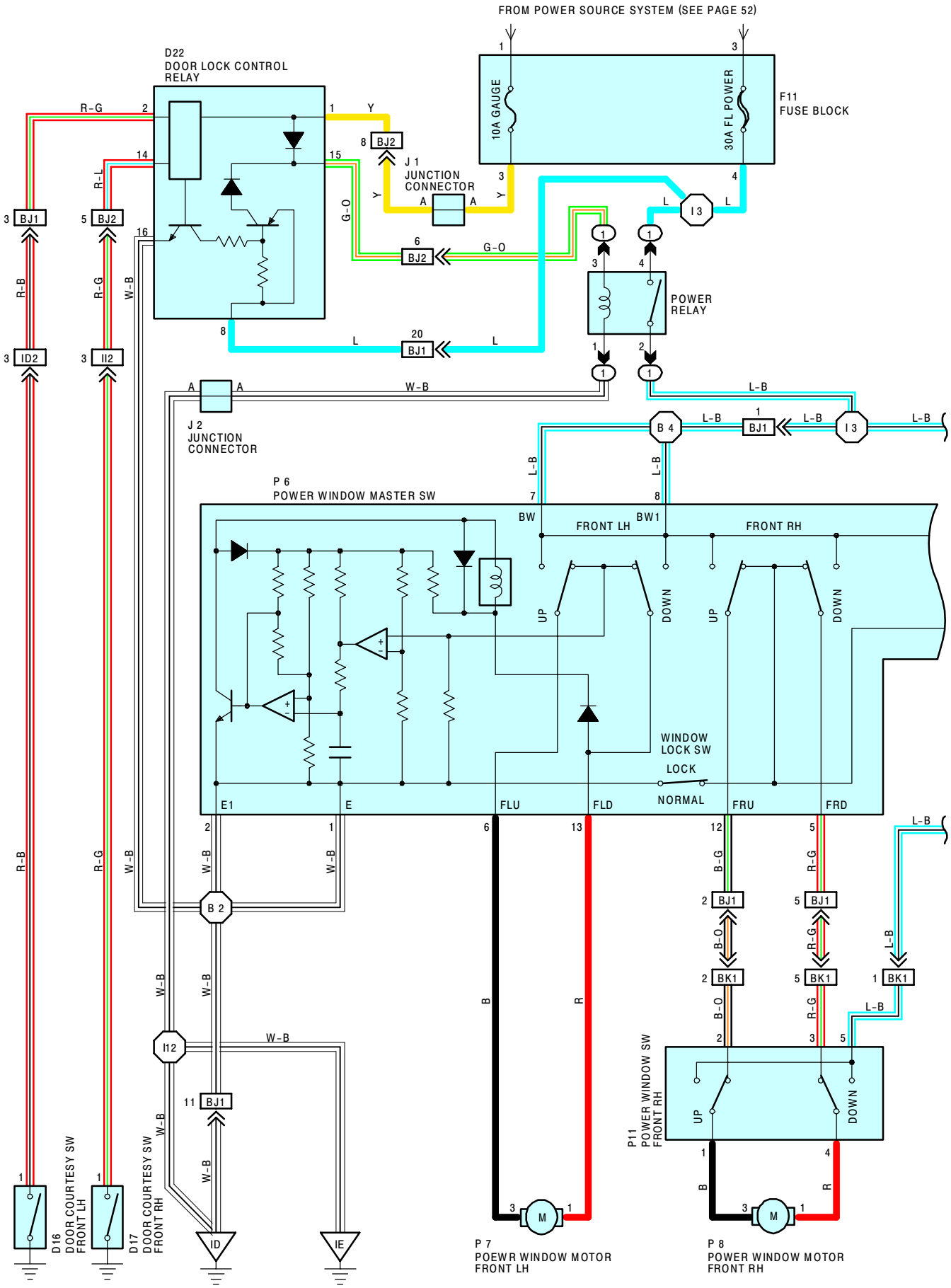

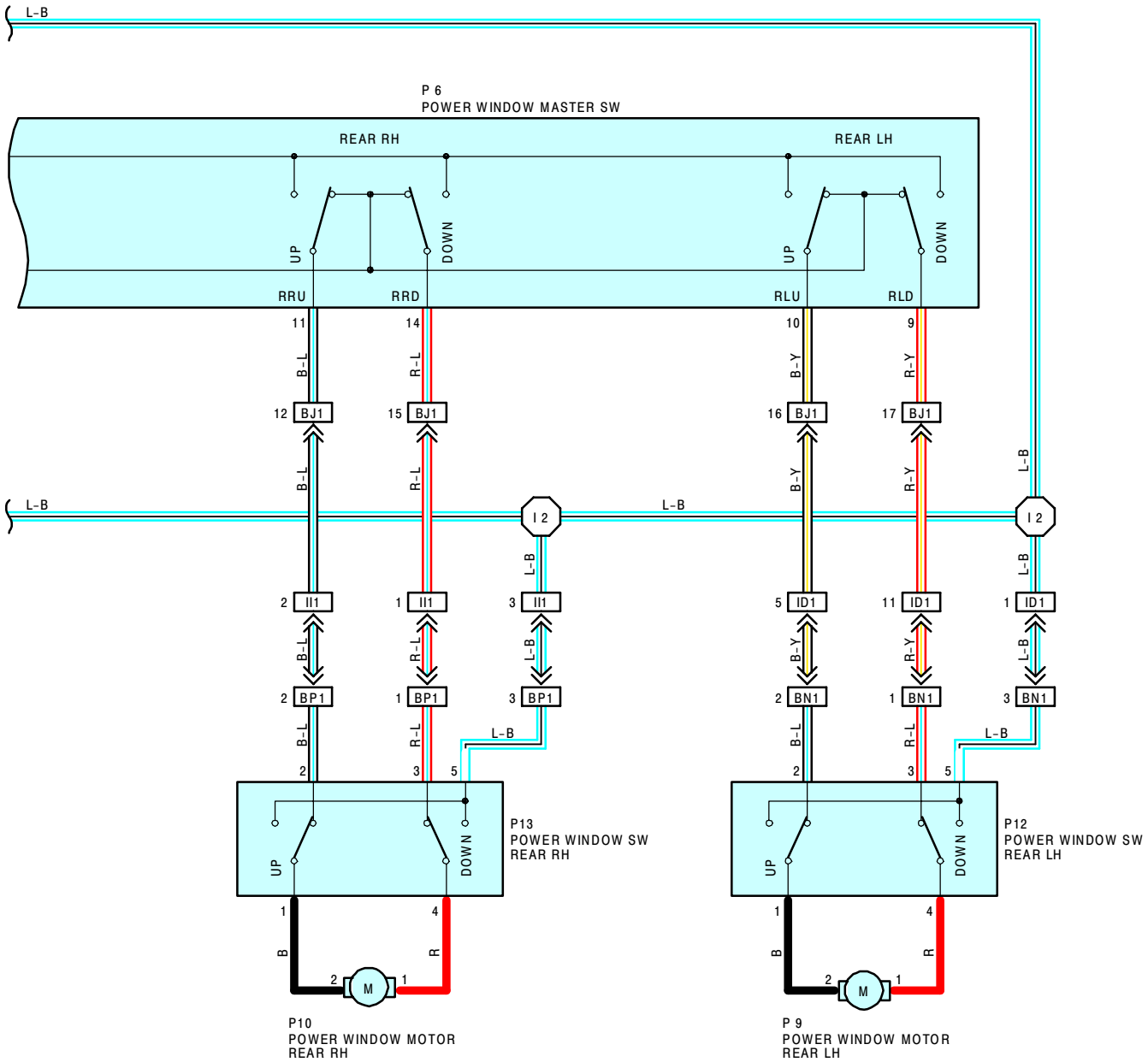
L-B
P 6
POWER WINDOW MASTER SW
REAR RH
REAR LH
UP
DOWN
RRU
RRD
RLU
RLD
11
14
10
9
B-L
R-L
B-Y
R-Y
12 BJ1
15 BJ1
16 BJ1
17 BJ1
I 2
I 2
2 II1
1 II1
3 II1
5 ID1
11 ID1
1 ID1
2 BP1
1 BP1
3 BP1
2 BN1
1 BN1
3 BN1
P13
POWER WINDOW SW
REAR RH
P12
POWER WINDOW SW
REAR LH
1
4
2
3
5
B
R
M
P10
POWER WINDOW MOTOR
REAR RH
P 9
POWER WINDOW MOTOR
REAR LH

POWER WINDOW

SYSTEM OUTLINE

WITH THE IGNITION SW TURNED ON, THE CURRENT FLOWS THROUGH THE **GAUGE** FUSE TO **TERMINAL 3** OF THE POWER RELAY → **TERMINAL 1** → **GROUND.** THIS ACTIVATES THE RELAY AND THE CURRENT FROM **FL POWER** FUSE FLOWS TO **TERMINAL 4** OF THE POWER RELAY → **TERMINAL 2** → **TERMINALS 7** AND **8** OF THE POWER WINDOW MASTER SW, TO **TERMINAL 5** OF THE POWER WINDOW SW FRONT RH, REAR LH AND REAR RH.

1. MANUAL UP OPERATION (DRIVER'S SIDE)

WITH THE IGNITION SW TURNED ON AND WITH THE POWER WINDOW MASTER SW (MANUAL SW) AT **UP** POSITION, THE CURRENT FLOWS TO **TERMINALS 7** AND **8** OF THE POWER WINDOW MASTER SW → **TERMINAL 6** → **TERMINAL 3** OF THE POWER WINDOW MOTOR FRONT LH → **TERMINAL 1** → **TERMINAL 13** OF THE POWER WINDOW MASTER SW → **TERMINALS 2** AND **1** → **GROUND,** CAUSING THE POWER WINDOW MOTOR TO ROTATE IN THE UP DIRECTION. THE WINDOW ASCENDS ONLY WHILE THE POWER WINDOW MASTER SW IS BEING PULLED.

IN DOWN OPERATION, THE CURRENT FLOW TO **TERMINALS 7** AND **8** OF THE POWER WINDOW MASTER SW → **TERMINAL 13** → **TERMINAL 1** OF THE POWER WINDOW MOTOR FRONT LH → **TERMINAL 3** → **TERMINAL 6** OF THE POWER WINDOW MASTER SW → **TERMINALS 2** AND **1** → **GROUND**. ACCORDING TO THE FLOW, THE MOTOR ROTATES IN THE DOWN DIRECTION, LOWERING THE WINDOW.

2. AUTO DOWN OPERATION (DRIVER'S SIDE)

WITH THE IGNITION SW ON AND WITH THE AUTO DOWN SW OF THE POWER WINDOW MASTER SW IN **DOWN** POSITION, THE CURRENT FLOWS TO **TERMINAL 7** AND **8** OF THE POWER WINDOW MASTER SW → **TERMINAL 13** → **TERMINAL 1** OF THE POWER WINDOW MOTOR FRONT LH → **TERMINAL 3** → **TERMINAL 6** OF THE POWER WINDOW MASTER SW → **TERMINALS 1** AND **2** → **GROUND,** CAUSING THE MOTOR TO ROTATE TOWARDS THE DOWN SIDE.

THEN THE SOLENOID IN THE POWER WINDOW MASTER SW IS ACTIVATED AND IT LOCKS THE AUTO SW BEING PUSHED, CAUSING THE MOTOR TO CONTINUE TO ROTATE IN AUTO DOWN OPERATION.

WHEN THE WINDOW HAS COMPLETELY DESCENDED, THE CURRENT BETWEEN **TERMINAL 6** OF THE POWER WINDOW MASTER SW AND **TERMINALS 1** AND **2** INCREASES. AS A RESULT, THE SOLENOID STOPS OPERATING, AUTO DOWN SW TURNS OFF, AND THE CURRENT FROM **TERMINALS 7** AND **8** OF THE POWER WINDOW MASTER SW TO **TERMINAL 13** IS CUT OFF, STOPPING THE MOTOR SO THAT AUTO STOP OCCURS.

3. STOPPING OF AUTO DOWN AT DRIVER'S WINDOW

WHEN THE MANUAL SW (DRIVER'S) IS PUSHED TO THE UP SIDE DURING AUTO DOWN OPERATION, A GROUND CIRCUIT OPENS IN THE POWER WINDOW MASTER SW AND THE CURRENT DOES NOT FLOW FROM **TERMINAL 6** OF THE POWER WINDOW MASTER SW TO **GROUND,** SO THE MOTOR STOPS, CAUSING AUTO DOWN OPERATION TO STOP. IF THE MANUAL SW IS PUSHED CONTINUOUSLY, THE MOTOR ROTATES IN THE UP DIRECTION IN MANUAL UP OPERATION.

4. MANUAL OPERATION BY POWER WINDOW SW (PASSENGER'S SIDE)

WITH THE POWER WINDOW SW (PASSENGER'S) PULLED TO THE UP SIDE, THE CURRENT FROM **TERMINAL 5** OF THE POWER WINDOW SW FRONT RH FLOWS TO **TERMINAL 1** OF THE POWER WINDOW SW → **TERMINAL 3** OF THE POWER WINDOW MOTOR → **TERMINAL 1** → **TERMINAL 4** OF THE POWER WINDOW SW → **TERMINAL 3** → **TERMINAL 5** OF THE POWER WINDOW MASTER SW → **TERMINALS 1** AND **2** → **GROUND,** CAUSING THE POWER WINDOW MOTOR FRONT RH (PASSENGER'S) TO ROTATE IN THE UP DIRECTION. UP OPERATION CONTINUES ONLY WHILE THE POWER WINDOW SW IS PULLED TO THE UP SIDE. WHEN THE WINDOW DESCENDS, THE CURRENT TO THE MOTOR FLOWS IN THE OPPOSITE DIRECTION, FROM **TERMINAL 1** TO **TERMINAL 3,** AND THE MOTOR ROTATES IN REVERSE.

WHEN THE WINDOW LOCK SW IS PUSHED OUT TO THE NORMAL SIDE, THE GROUND CIRCUIT TO THE PASSENGER'S WINDOW BECOMES OPEN.

AS A RESULT, EVEN IF OPEN/CLOSE OPERATION OF THE PASSENGER'S WINDOW IS TRIED, THE CURRENT FROM **TERMINALS 1** AND **2** OF THE POWER WINDOW MASTER SW IS NOT GROUNDED AND THE MOTOR DOES NOT ROTATE, SO THE PASSENGER'S WINDOW CANNOT BE OPERATED AND WINDOW LOCK OCCURS.

FURTHERMORE REAR LH, RH WINDOW OPERATE THE SAME AS THE ABOVE OPERATION.

5. KEY OFF POWER WINDOW OPERATION

WITH THE IGNITION SW TURNED FROM ON TO OFF, THE DOOR LOCK CONTROL RELAY OPERATES AND KEEPS THE CURRENT FLOW FROM **FL POWER** FUSE TO **TERMINAL 8** OF THE DOOR LOCK CONTROL RELAY → **TERMINAL 15** → **TERMINAL 3** OF THE POWER RELAY → **TERMINAL 1** → **GROUND** FOR ABOUT **60** SECONDS. THE SAME AS NORMAL OPERATION, THE CURRENT FLOWS FROM **FL POWER** FUSE TO **TERMINAL 4** OF THE POWER RELAY → **TERMINAL 2** → **TERMINAL 7** AND **8** OF THE POWER WINDOW MASTER SW, TO **TERMINAL 5** OF THE POWER WINDOW SW FRONT RH. AS A RESULT, FOR ABOUT **60** SECONDS AFTER THE IGNITION SW IS TURNED OFF, IT IS POSSIBLE TO RAISE AND LOWER THE WINDOW BY THE FUNCTIONING OF THIS RELAY. ALSO, BY OPENING THE FRONT DOOR (THE DOOR COURTESY SW ON) WITHIN ABOUT **60** SECONDS AFTER TURNING THE IGNITION SW TO OFF, A SIGNAL IS INPUT TO **TERMINAL 2** OR **14** OF DOOR LOCK CONTROL RELAY. AS A RESULT, THE RELAY TURNS OFF, AND UP AND DOWN MOVEMENT OF THE WINDOW STOPS.

SERVICE HINTS

P 6 POWER WINDOW MASTER SW

7, 8-GROUND : APPROX. **12** VOLTS WITH THE IGNITION SW AT **ON** POSITION OR KEY OFF OPERATED
1, 2-GROUND : ALWAYS CONTINUITY
6-GROUND : APPROX. **12** VOLTS WITH THE IGNITION SW **ON** AND MASTER SW (DRIVER'S WINDOW) AT **UP** POSITION
13-GROUND : APPROX. **12** VOLTS WITH THE IGNITION SW **ON** AND MASTER SW (DRIVER'S WINDOW) AT **DOWN** OR **AUTO DOWN** POSITION

WINDOW LOCK SW

OPEN WITH THE WINDOW LOCK SW AT **LOCK** POSITION

: PARTS LOCATION

CODE	SEE PAGE	CODE	SEE PAGE	CODE	SEE PAGE
D16	26	**J 2**	25	**P10**	27
D17	26	**P 6**	27	**P11**	27
D22	26	**P 7**	27	**P12**	27
F11	25	**P 8**	27	**P13**	27
J 1	25	**P 9**	27		

: RELAY BLOCKS

CODE	SEE PAGE	RELAY BLOCKS (RELAY BLOCK LOCATION)
1	20	R/B NO. 1 (LEFT KICK PANEL)

: CONNECTOR JOINING WIRE HARNESS AND WIRE HARNESS

CODE	SEE PAGE	JOINING WIRE HARNESS AND WIRE HARNESS (CONNECTOR LOCATION)
ID1	32	COWL WIRE AND FLOOR NO. 1 WIRE (LEFT KICK PANEL)
ID2		
II1	32	COWL WIRE AND FLOOR NO. 2 WIRE (RIGHT KICK PANEL)
II2		
BJ1	34	FRONT DOOR LH WIRE AND COWL WIRE (LEFT KICK PANEL)
BJ2		
BK1	34	FRONT DOOR RH WIRE AND COWL WIRE (RIGHT KICK PANEL)
BN1	34	REAR DOOR LH WIRE AND FLOOR NO. 1 WIRE (LEFT CENTER PILLAR)
BP1	34	REAR DOOR RH WIRE AND FLOOR NO. 2 WIRE (RIGHT CENTER PILLAR)

: GROUND POINTS

CODE	SEE PAGE	GROUND POINTS LOCATION
ID	32	LEFT KICK PANEL
IE	32	RIGHT KICK PANEL

: SPLICE POINTS

CODE	SEE PAGE	WIRE HARNESS WITH SPLICE POINTS	CODE	SEE PAGE	WIRE HARNESS WITH SPLICE POINTS
I 2	32	COWL WIRE	**B 2**	36	FRONT DOOR LH WIRE
I 3			**B 4**		
I12					

D16, D17 BLUE

D22 GRAY

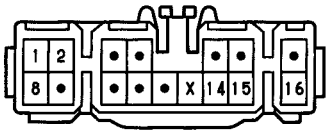

F11

(SEE PAGE 20)

J 1

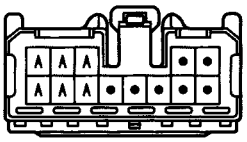

(HINT:SEE PAGE 7)

J 2 BLUE

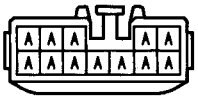

(HINT:SEE PAGE 7)

P 6

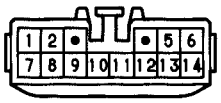

P 7, P 8

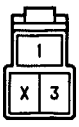

P 9, P10

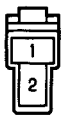

P11, P12, P13

DOOR LOCK CONTROL

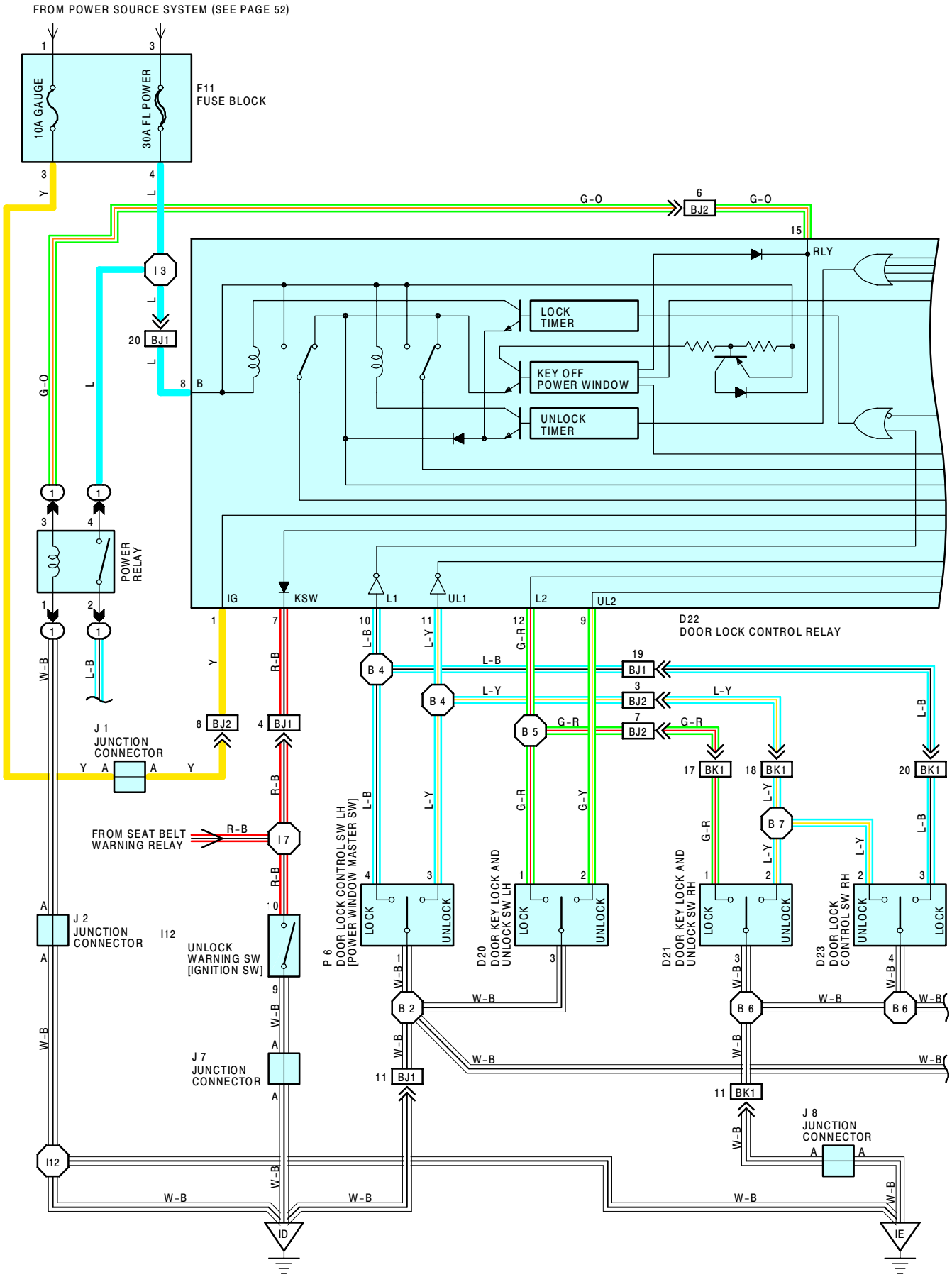

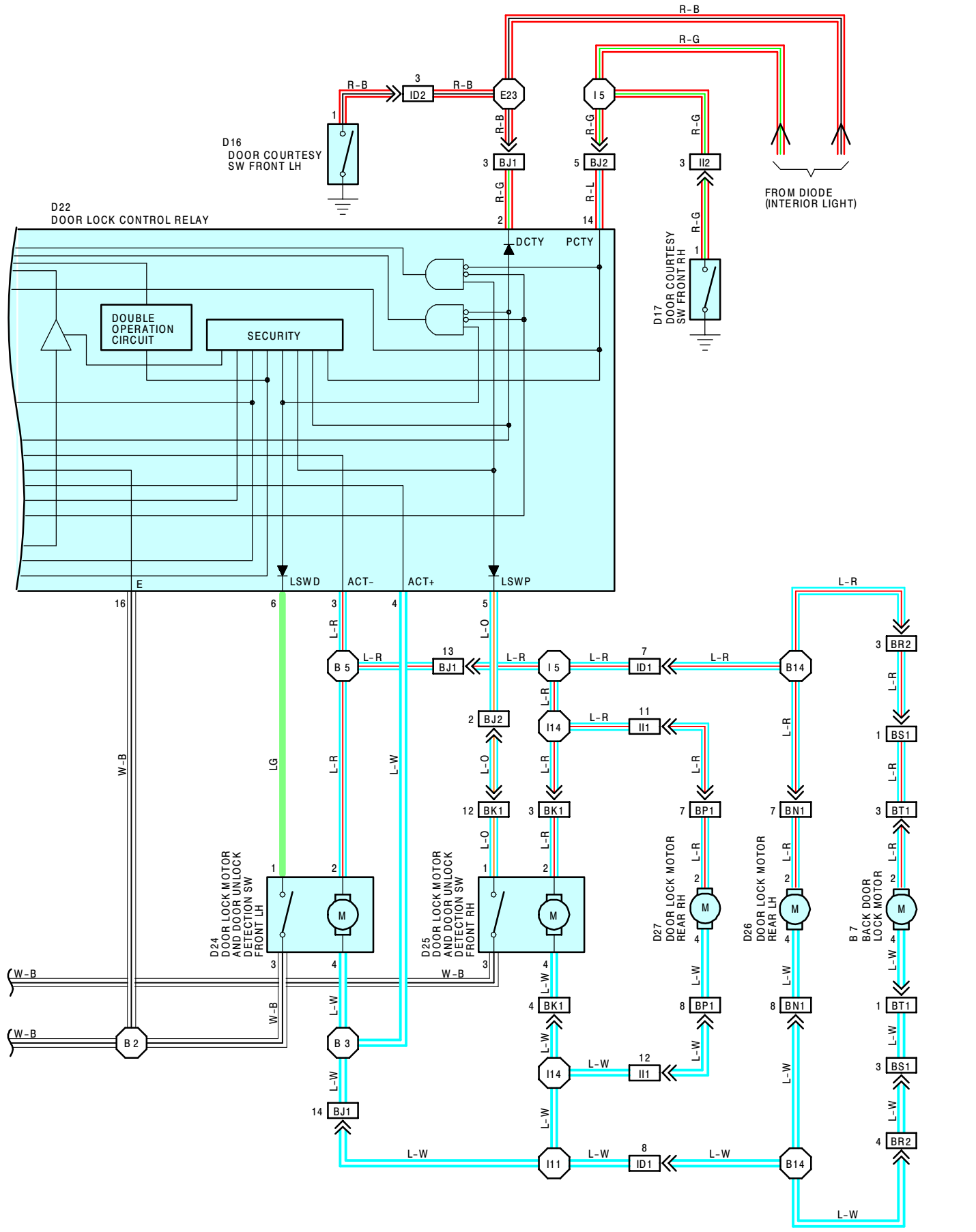
R-B
R-G
D16
DOOR COURTESY
SW FRONT LH
ID2
E23
I 5
BJ1
BJ2
II2
FROM DIODE
(INTERIOR LIGHT)
D22
DOOR LOCK CONTROL RELAY
DCTY
PCTY
DOUBLE
OPERATION
CIRCUIT
SECURITY
D17
DOOR COURTESY
SW FRONT RH
E
LSWD
ACT-
ACT+
LSWP
L-R
L-O
L-W
W-B
LG
B 5
B 2
B 3
I14
I11
ID1
B14
BR2
BS1
BT1
BK1
BP1
BN1
D24
DOOR LOCK MOTOR
AND DOOR UNLOCK
DETECTION SW
FRONT LH
D25
DOOR LOCK MOTOR
AND DOOR UNLOCK
DETECTION SW
FRONT RH
D27
DOOR LOCK MOTOR
REAR RH
D26
DOOR LOCK MOTOR
REAR LH
B 7
BACK DOOR
LOCK MOTOR
M

DOOR LOCK CONTROL

SYSTEM OUTLINE

CURRENT ALWAYS FLOWS TO **TERMINAL 8** OF THE DOOR LOCK CONTROL RELAY THROUGH **FL POWER** FUSE.

WITH THE IGNITION SW TURNED ON, THE CURRENT FLOWS TO **TERMINAL 1** OF THE DOOR LOCK CONTROL RELAY THROUGH **GAUGE** FUSE.

1. MANUAL LOCK OPERATION

TO CHANGE THE DOOR LOCK CONTROL SW OR KEY LOCK AND UNLOCK SW TO **LOCK** POSITION, A LOCK SIGNAL IS INPUT TO **TERMINALS 10** OR **12** OF THE DOOR LOCK CONTROL RELAY, CAUSING THE RELAY TO FUNCTION. THE CURRENT FLOWS FROM **TERMINAL 8** OF THE DOOR LOCK CONTROL RELAY TO **TERMINAL 4** → **TERMINAL 4** OF THE DOOR LOCK MOTORS → **TERMINAL 2** → **TERMINAL 3** OF THE DOOR LOCK CONTROL RELAY → **TERMINAL 16** → **GROUND,** CAUSING DOORS TO LOCK.

2. MANUAL UNLOCK OPERATION

TO CHANGE THE DOOR LOCK CONTROL SW OR DOOR KEY LOCK AND UNLOCK SW TO **UNLOCK** POSITION, AN UNLOCK SIGNAL IS INPUT TO **TERMINALS 9** OR **11** OF THE DOOR LOCK CONTROL RELAY, CAUSING THE RELAY TO FUNCTION. THE CURRENT FLOWS FROM **TERMINAL 8** OF THE DOOR LOCK CONTROL RELAY → **TERMINAL 3** → **TERMINAL 2** OF THE DOOR LOCK MOTORS → **TERMINAL 4** → **TERMINAL 4** OF THE DOOR LOCK CONTROL RELAY → **TERMINAL 16** → **GROUND,** CAUSING DOORS TO UNLOCK.

3. DOUBLE OPERATION UNLOCK OPERATION

WHEN THE DOOR KEY LOCK AND UNLOCK SW (DRIVER'S) IS TURNED TO THE UNLOCK SIDE, ONLY THE DRIVER'S DOOR IS MECHANICALLY UNLOCKED. TURNING THE DOOR KEY LOCK AND UNLOCK SW (DRIVER'S) TO THE UNLOCK SIDE CAUSES A SIGNAL TO BE INPUT TO **TERMINAL 9** OF THE DOOR LOCK CONTROL RELAY, AND IF THE SIGNAL IS INPUT AGAIN WITHIN **3** SECONDS BY TURNING THE SWITCH TO THE UNLOCK SIDE AGAIN, THE CURRENT FLOWS FROM **TERMINAL 3** OF THE DOOR LOCK CONTROL RELAY TO **TERMINAL 2** OF THE DOOR LOCK MOTORS → **TERMINAL 4** → **TERMINAL 4** OF THE DOOR LOCK CONTROL RELAY → **TERMINAL 16** → **GROUND,** CAUSING THE DOOR LOCK MOTOR TO OPERATE TO UNLOCK THE DOORS.

4. IGNITION KEY REMINDER OPERATION

***** OPERATING DOOR LOCK KNOB (OPERATION OF DOOR LOCK MOTORS)

WITH THE IGNITION KEY IN CYLINDER (UNLOCK WARNING SW ON), WHEN EITHER FRONT DOOR IS OPENED AND LOCKED USING DOOR LOCK KNOB (DOOR LOCK MOTOR), THE DOOR IS LOCKED ONCE BUT EACH DOOR IS UNLOCKED SOON BY THE FUNCTION OF THE DOOR LOCK CONTROL RELAY. AS A RESULT, THE CURRENT FLOWS FROM **TERMINAL 8** OF THE DOOR LOCK CONTROL RELAY → **TERMINAL 3** → **TERMINAL 2** OF THE DOOR LOCK MOTORS → **TERMINAL 4** → **TERMINAL 4** OF THE DOOR LOCK CONTROL RELAY → **TERMINAL 16** → **GROUND,** CAUSING ALL THE DOORS TO UNLOCK.

***** OPERATING DOOR LOCK CONTROL SW OR DOOR KEY LOCK SW

WITH THE IGNITION KEY IN CYLINDER (UNLOCK WARNING SW ON), WHEN EITHER FRONT DOOR IS OPENED AND LOCKED USING DOOR LOCK CONTROL SW OR KEY SW, THE DOOR IS LOCKED ONCE BUT EACH DOOR IS UNLOCK SOON BY THE FUNCTION OF SW CONTAINED IN MOTORS, WHICH THE SIGNAL IS INPUT TO **TERMINAL 6** (DRIVER'S) OR **5** (PASSENGER'S) OF THE DOOR LOCK CONTROL RELAY. ACCORDING TO THIS INPUT SIGNAL, THE CURRENT FLOWS FROM **TERMINAL 8** OF THE DOOR LOCK CONTROL RELAY TO **TERMINAL 3** → **TERMINAL 2** OF THE DOOR LOCK MOTORS → **TERMINAL 4** → **TERMINAL 4** OF THE DOOR LOCK CONTROL RELAY → **TERMINAL 16** → **GROUND,** CAUSING ALL THE DOORS TO UNLOCK.

***** IN CASE OF KEY LESS LOCK

WITH THE IGNITION KEY IN THE CYLINDER (UNLOCK WARNING SW ON), WHEN THE UNLOCK FUNCTION IS DISTURBED MORE THAN **0.2** SECOND, FOR EXAMPLE PUSHING THE DOOR LOCK KNOB ETC., THE DOOR HOLDS ON LOCK CONDITION. AFTER CLOSING THE DOOR, THE DOOR COURTESY SW INPUTS THE SIGNAL INTO **TERMINAL 2** OR **14** OF THE DOOR LOCK CONTROL RELAY. BY THIS INPUT SIGNAL, THE ECU WORKS AND THE CURRENT FLOWS FROM **TERMINAL 8** OF THE DOOR LOCK CONTROL RELAY → **TERMINAL 3** → **TERMINAL 2** OF THE DOOR LOCK MOTORS → **TERMINAL 4** → **TERMINAL 4** OF THE DOOR LOCK CONTROL RELAY → **TERMINAL 16** → **GROUND,** CAUSING ALL THE DOORS TO UNLOCK.

SERVICE HINTS

D22 DOOR LOCK CONTROL RELAY

16-GROUND : ALWAYS CONTINUITY
2-GROUND : CONTINUITY WITH DRIVER'S DOOR OPEN
8-GROUND : ALWAYS APPROX. **12** VOLTS
3-GROUND : APPROX. **12** VOLTS **0.2** SECONDS WITH FOLLOWING OPERATION
* DOOR LOCK CONTROL SW UNLOCKED
* DOOR LOCK CONTROL SW LOCKED WITH THE IGNITION KEY IN CYLINDER AND DRIVER'S DOOR OPEN (IGNITION KEY REMINDER FUNCTION)
* DOOR LOCK KNOB LOCKED WITH THE IGNITION KEY IN CYLINDER AND DRIVER'S DOOR OPEN (IGNITION KEY REMINDER FUNCTION)
* UNLOCKING THE DRIVER'S, PASSENGER'S DOOR CYLINDER WITH KEY

4-GROUND : APPROX. **12** VOLTS **0.2** SECONDS WITH FOLLOWING OPERATION
* DOOR LOCK CONTROL SW LOCKED
* LOCKING THE DRIVER'S, PASSENGER'S DOOR CYLINDER WITH KEY

10-GROUND : **0** VOLTS WITH THE DOOR LOCK CONTROL SW LOCKED
14-GROUND : CONTINUITY WITH THE PASSENGER'S DOOR OPEN
6-GROUND : CONTINUITY WITH THE DRIVER'S DOOR LOCK KNOB UNLOCKED
5-GROUND : CONTINUITY WITH THE PASSENGER'S DOOR LOCK KNOB UNLOCKED
11-GROUND : **0** VOLTS WITH THE DOOR LOCK CONTROL SW UNLOCKED, PASSENGER'S DOOR LOCK CYLINDER UNLOCKED WITH KEY
1-GROUND : APPROX. **12** VOLTS WITH THE IGNITION SW AT **ON** POSITION
9-GROUND : **0** VOLTS WITH THE DRIVER'S DOOR LOCK CYLINDER UNLOCKED WITH KEY
12-GROUND : **0** VOLTS WITH THE DRIVER'S, PASSENGER'S DOOR LOCK CYLINDER LOCKED WITH KEY

I12 UNLOCK WARNING SW [IGNITION SW]

10-9 : CLOSED WITH THE IGNITION KEY IN CYLINDER

D20, D21 DOOR KEY LOCK AND UNLOCK SW LH, RH

2-3 : CLOSED WITH THE DOOR LOCK CYLINDER UNLOCKED WITH KEY
1-3 : CLOSED WITH THE DOOR LOCK CYLINDER LOCKED WITH KEY

D16, D17 DOOR COURTESY SW FRONT LH, RH

1-GROUND : CLOSED WITH THE FRONT DOOR OPEN

○ : PARTS LOCATION

CODE	SEE PAGE	CODE	SEE PAGE	CODE	SEE PAGE
B 7	26	**D23**	26	**I12**	25
D16	26	**D24**	26	**J 1**	25
D17	26	**D25**	26	**J 2**	25
D20	26	**D26**	26	**J 7**	25
D21	26	**D27**	26	**J 8**	25
D22	26	**F11**	25	**P 6**	27

⬭ : RELAY BLOCKS

CODE	SEE PAGE	RELAY BLOCKS (RELAY BLOCK LOCATION)
1	20	R/B NO. 1 (LEFT KICK PANEL)

▭ : CONNECTOR JOINING WIRE HARNESS AND WIRE HARNESS

CODE	SEE PAGE	JOINING WIRE HARNESS AND WIRE HARNESS (CONNECTOR LOCATION)
ID1	32	COWL WIRE AND FLOOR NO. 1 WIRE (LEFT KICK PANEL)
ID2		
II1	32	COWL WIRE AND FLOOR NO. 2 WIRE (RIGHT KICK PANEL)
II2		
BJ1	34	FRONT DOOR LH WIRE AND COWL WIRE (LEFT KICK PANEL)
BJ2		
BK1	34	FRONT DOOR RH WIRE AND COWL WIRE (RIGHT KICK PANEL)
BN1	34	REAR DOOR LH WIRE AND FLOOR NO. 1 WIRE (LEFT CENTER PILLAR)
BP1	34	REAR DOOR RH WIRE AND FLOOR NO. 2 WIRE (RIGHT CENTER PILLAR)
BR2	34	LUGGAGE ROOM NO. 1 WIRE AND FLOOR NO. 1 WIRE (LEFT QUARTER PANEL INNER)
BS1	34	BACK DOOR NO. 1 WIRE AND LUGGAGE ROOM NO. 1 WIRE (LEFT REAR SIDE OF ROOF)
BT1	36	BACK DOOR NO. 1 WIRE AND BACK DOOR NO. 2 WIRE (BACK DOOR LEFT)

▽ : GROUND POINTS

CODE	SEE PAGE	GROUND POINTS LOCATION
ID	32	LEFT KICK PANEL
IE	32	RIGHT KICK PANEL

DOOR LOCK CONTROL

: SPLICE POINTS

CODE	SEE PAGE	WIRE HARNESS WITH SPLICE POINTS	CODE	SEE PAGE	WIRE HARNESS WITH SPLICE POINTS
E23	30	COWL WIRE	B 2	36	FRONT DOOR LH WIRE
I 3	32		B 3		
I 5			B 4		
I 7			B 5		
I11			B 6	36	FRONT DOOR RH WIRE
I12			B 7		
I14			B14	36	FLOOR WIRE

B 7

D16, D17 BLUE

D20, D21

D22 GRAY

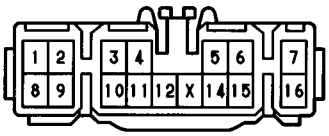

D23

D24, D25

D26, D27

F11

(SEE PAGE 20)

I12 BLACK

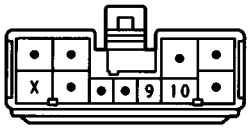

J 1

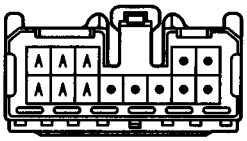

(HINT:SEE PAGE 7)

J 2 BLUE

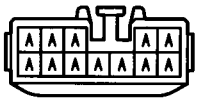

(HINT:SEE PAGE 7)

J 7 BLUE

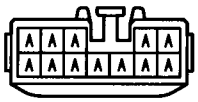

(HINT SEE PAGE 7)

J 8 BLUE

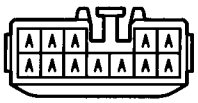

(HINT:SEE PAGE 7)

P 6

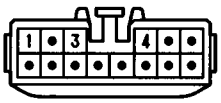

AUTO ANTENNA

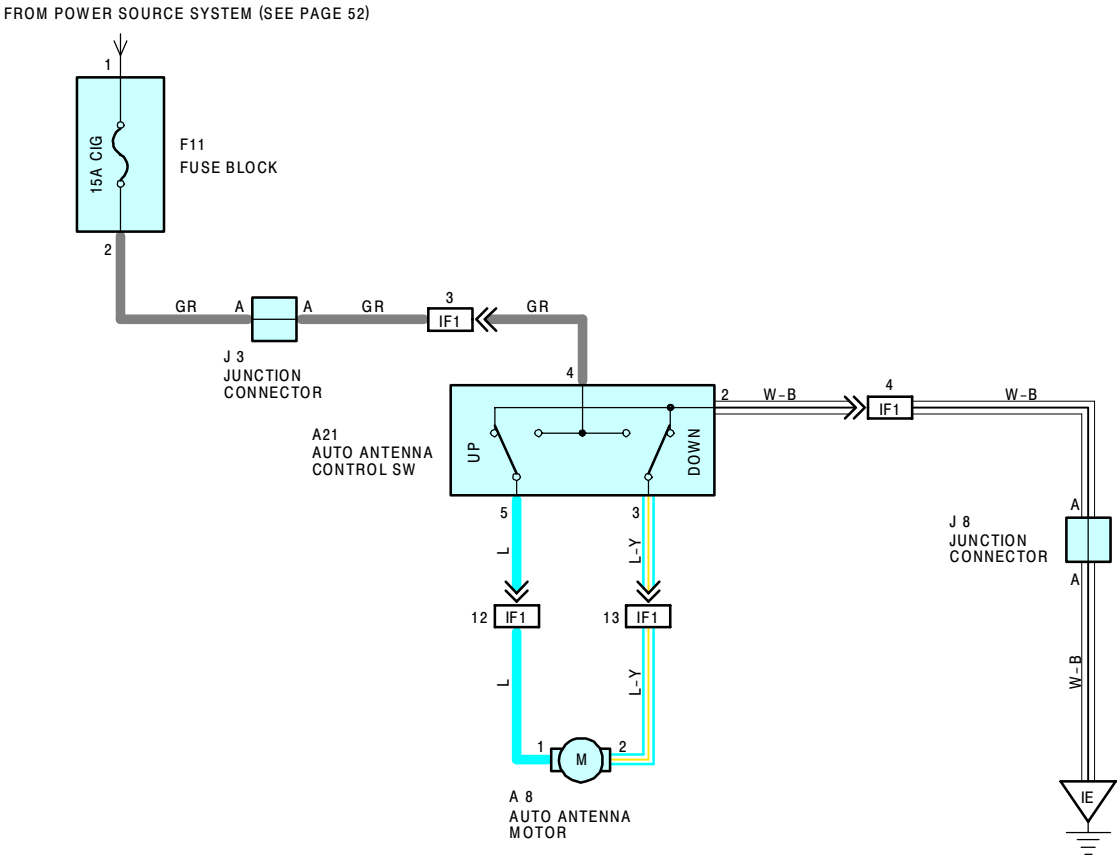

SERVICE HINTS

A21 AUTO ANTENNA SW

4-GROUND : APPROX. **12** VOLTS WITH THE IGNITION SW AT **ACC** OR **ON** POSITION
2-GROUND : ALWAYS CONTINUITY

○ : PARTS LOCATION

CODE	SEE PAGE	CODE	SEE PAGE	CODE	SEE PAGE
A 8	22	**F11**	25	**J 8**	25
A21	24	**J 3**	25		

▭ : CONNECTOR JOINING WIRE HARNESS AND WIRE HARNESS

CODE	SEE PAGE	JOINING WIRE HARNESS AND WIRE HARNESS (CONNECTOR LOCATION)
IF1	32	COWL WIRE AND INSTRUMENT PANEL WIRE (INSTRUMENT PANEL CENTER)

▽ : GROUND POINTS

CODE	SEE PAGE	GROUND POINTS LOCATION
IE	32	RIGHT KICK PANEL

A 8 GRAY

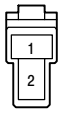

A21 BLACK

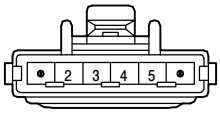

F11

(SEE PAGE 20)

J 3

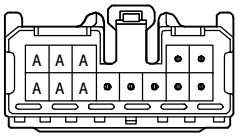

(HINT : SEE PAGE 7)

J 8 BLUE

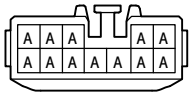

(HIT : SEE PAGE 7)

POWER SEAT

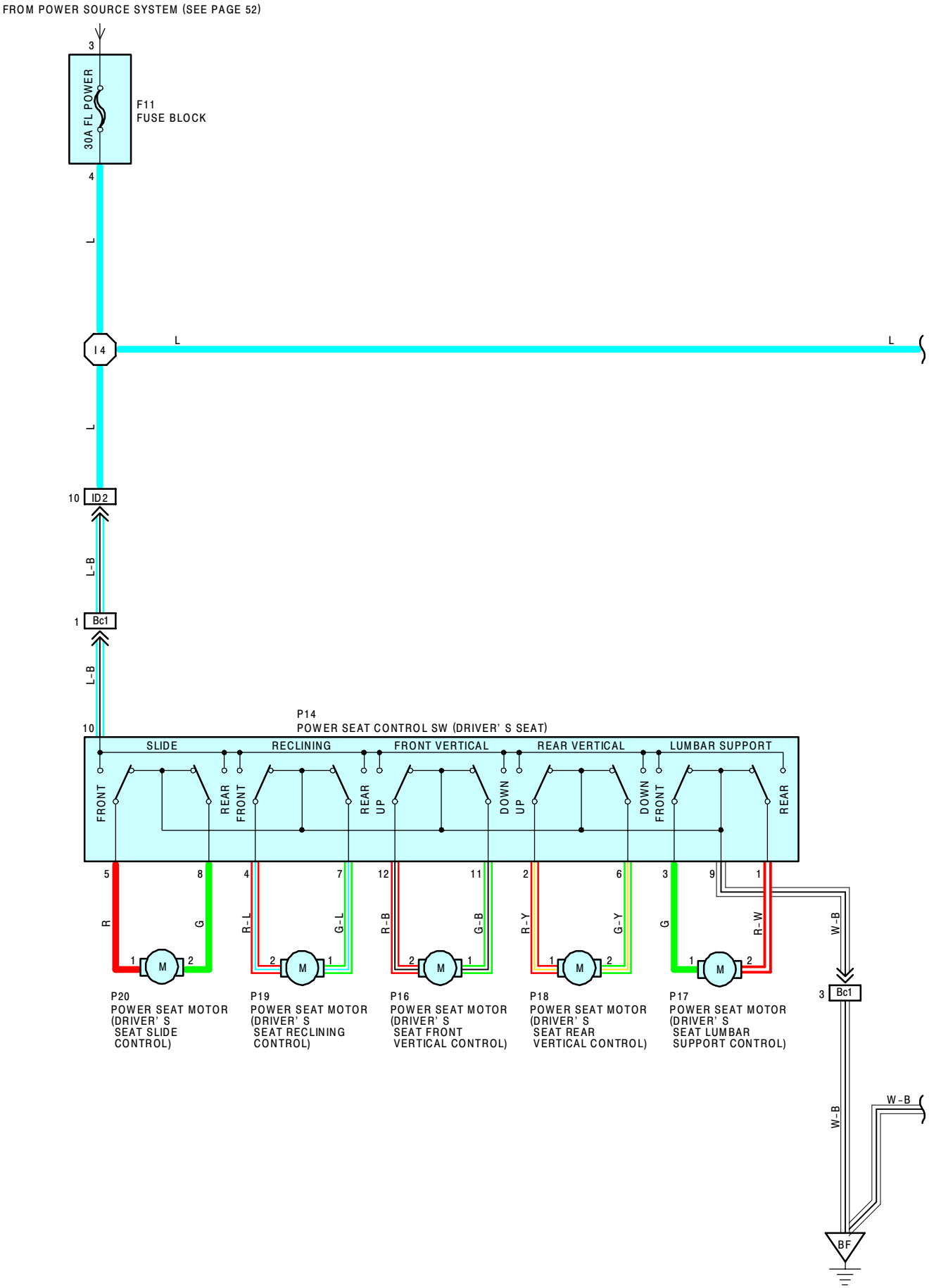
FROM POWER SOURCE SYSTEM (SEE PAGE 52)
3
30A FL POWER
F11
FUSE BLOCK
4
L
I 4
L
L
L
10
ID2
L-B
1
Bc1
L-B
10
P14
POWER SEAT CONTROL SW (DRIVER' S SEAT)
SLIDE
RECLINING
FRONT VERTICAL
REAR VERTICAL
LUMBAR SUPPORT
FRONT
REAR
FRONT
REAR
UP
DOWN
UP
DOWN
FRONT
REAR
5
8
4
7
12
11
2
6
3
9
1
R
G
R-L
G-L
R-B
G-B
R-Y
G-Y
G
R-W
W-B
M
P20
POWER SEAT MOTOR
(DRIVER' S
SEAT SLIDE
CONTROL)
P19
POWER SEAT MOTOR
(DRIVER' S
SEAT RECLINING
CONTROL)
P16
POWER SEAT MOTOR
(DRIVER' S
SEAT FRONT
VERTICAL CONTROL)
P18
POWER SEAT MOTOR
(DRIVER' S
SEAT REAR
VERTICAL CONTROL)
P17
POWER SEAT MOTOR
(DRIVER' S
SEAT LUMBAR
SUPPORT CONTROL)
3
Bc1
W-B
W-B
BF

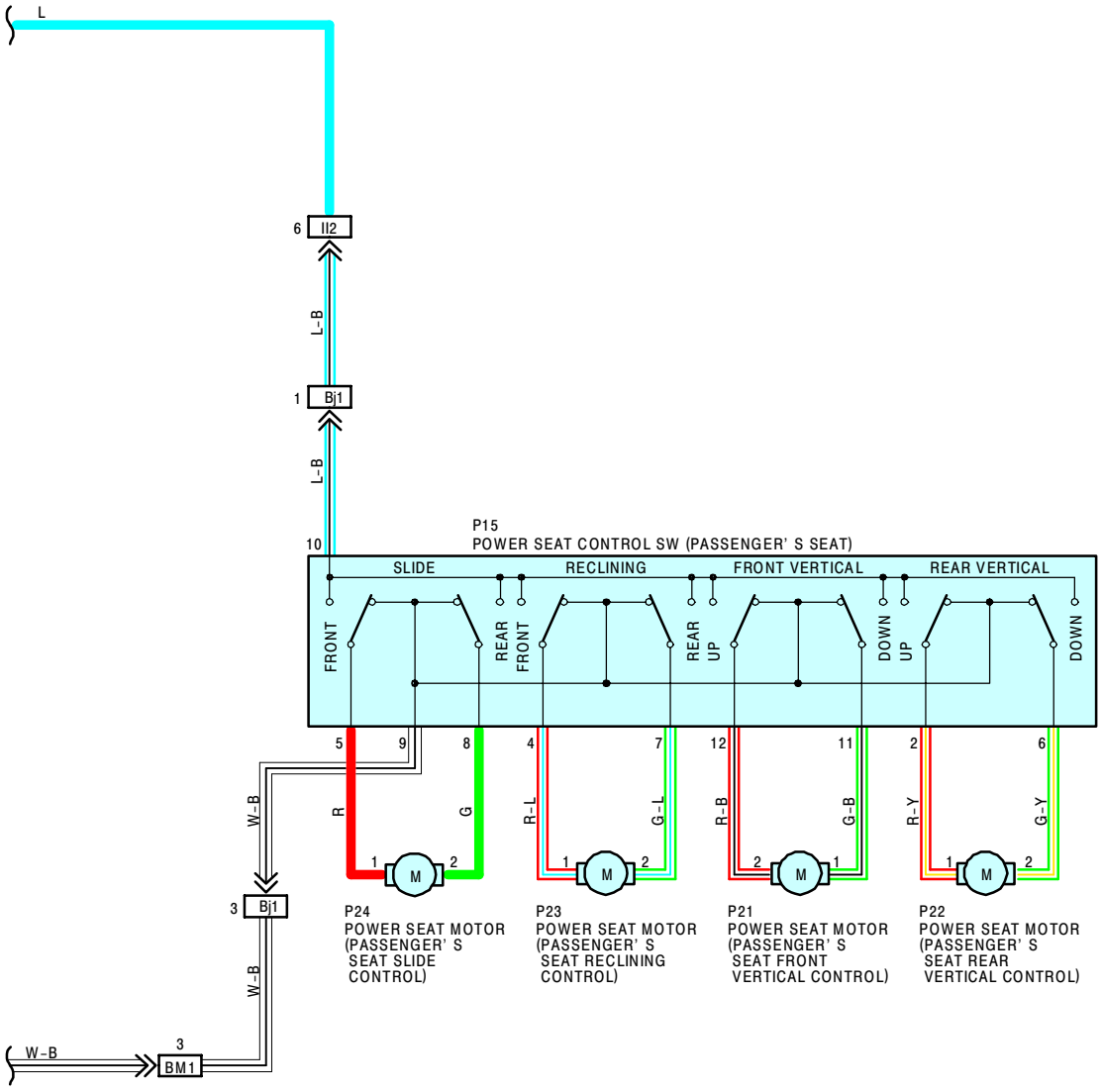
L
6
II2
L-B
1
Bj1
L-B
10
P15
POWER SEAT CONTROL SW (PASSENGER' S SEAT)
SLIDE
RECLINING
FRONT VERTICAL
REAR VERTICAL
FRONT
REAR
REAR
UP
DOWN
UP
DOWN
5
9
8
4
7
12
11
2
6
W-B
R
G
R-L
G-L
R-B
G-B
R-Y
G-Y
M
1
2
3
Bj1
W-B
W-B
3
BM1
P24
POWER SEAT MOTOR
(PASSENGER' S
SEAT SLIDE
CONTROL)
P23
POWER SEAT MOTOR
(PASSENGER' S
SEAT RECLINING
CONTROL)
P21
POWER SEAT MOTOR
(PASSENGER' S
SEAT FRONT
VERTICAL CONTROL)
P22
POWER SEAT MOTOR
(PASSENGER' S
SEAT REAR
VERTICAL CONTROL)

POWER SEAT

SERVICE HINTS

P14 POWER SEAT CONTROL SW (DRIVER'S SEAT)

10-5 : CLOSED WITH THE DRIVER'S SEAT AT FRONT SLIDE OPERATION
10-8 : CLOSED WITH THE DRIVER'S SEAT AT REAR SLIDE OPERATION
10-4 : CLOSED WITH THE DRIVER'S SEAT AT FRONT RECLINING OPERATION
10-7 : CLOSED WITH THE DRIVER'S SEAT AT REAR RECLINING OPERATION
10-12 : CLOSED WITH THE DRIVER'S SEAT AT FRONT VERTICAL UP OPERATION
10-11 : CLOSED WITH THE DRIVER'S SEAT AT FRONT VERTICAL DOWN OPERATION
10-2 : CLOSED WITH THE DRIVER'S SEAT AT REAR VERTICAL UP OPERATION
10-6 : CLOSED WITH THE DRIVER'S SEAT AT REAR VERTICAL DOWN OPERATION
10-3 : CLOSED WITH THE DRIVER'S SEAT AT LUMBAR SUPPORT FRONT OPERATION
10-1 : CLOSED WITH THE DRIVER'S SEAT AT LUMBAR SUPPORT REAR OPERATION
9-GROUND : ALWAYS CONTINUITY

P15 POWER SEAT CONTROL SW (PASSENGER'S SEAT)

10-5 : CLOSED WITH THE PASSENGER'S SEAT AT FRONT SLIDE OPERATION
10-8 : CLOSED WITH THE PASSENGER'S SEAT AT REAR SLIDE OPERATION
10-4 : CLOSED WITH THE PASSENGER'S SEAT AT FRONT RECLINING OPERATION
10-7 : CLOSED WITH THE PASSENGER'S SEAT AT REAR RECLINING OPERATION
10-12 : CLOSED WITH THE PASSENGER'S SEAT AT FRONT VERTICAL UP OPERATION
10-11 : CLOSED WITH THE PASSENGER'S SEAT AT FRONT VERTICAL DOWN OPERATION
10-2 : CLOSED WITH THE PASSENGER'S SEAT AT REAR VERTICAL UP OPERATION
10-6 : CLOSED WITH THE PASSENGER'S SEAT AT REAR VERTICAL DOWN OPERATION
9-GROUND : ALWAYS CONTINUITY

○ : PARTS LOCATION

CODE	SEE PAGE	CODE	SEE PAGE	CODE	SEE PAGE
F11	25	**P17**	28	**P21**	28
P14	28	**P18**	28	**P22**	28
P15	28	**P19**	28	**P23**	28
P16	28	**P20**	28	**P24**	28

▭ : CONNECTOR JOINING WIRE HARNESS AND WIRE HARNESS

CODE	SEE PAGE	JOINING WIRE HARNESS AND WIRE HARNESS (CONNECTOR LOCATION)
ID2	32	COWL WIRE AND FLOOR NO. 1 WIRE (LEFT KICK PANEL)
II2	32	COWL WIRE AND FLOOR NO. 2 WIRE (RIGHT KICK PANEL)
BM1	34	FLOOR NO. 2 WIRE AND FLOOR NO. 1 WIRE (UNDER THE CENTER CONSOLE)
Bc1	38	FLOOR NO. 1 WIRE AND SEAT NO. 1 WIRE (UNDER THE DRIVER'S SEAT)
BI1	38	FLOOR NO. 2 WIRE AND SEAT NO. 1 WIRE (UNDER THE PASSENGER'S SEAT)

▽ : GROUND POINTS

CODE	SEE PAGE	GROUND POINTS LOCATION
BF	34	UNDER THE CENTER CONSOLE BOX

⬡ : SPLICE POINTS

CODE	SEE PAGE	WIRE HARNESS WITH SPLICE POINTS	CODE	SEE PAGE	WIRE HARNESS WITH SPLICE POINTS
I4	32	COWL WIRE			

F11

(SEE PAGE 20)

P14

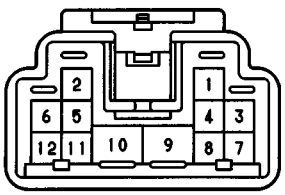

P15

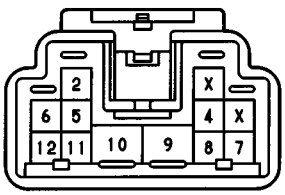

P16, P21 BLUE

P17

P18, P22 ORANGE

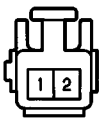

P19, P20
P23, P24

A 4 (A) BLACK

A 5 (B) GRAY

A 6 (A) GRAY

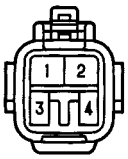

A 7 (B) GRAY

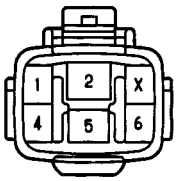

A12 (A) DARK GRAY

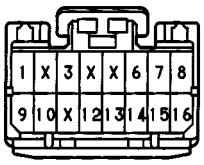

A13 (B) DARK GRAY

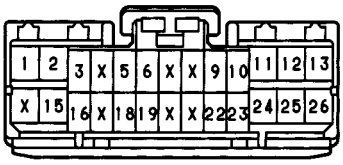

A22 GRAY

A23, A24

A25, A26

B 1 GRAY

C10 (A) GRAY

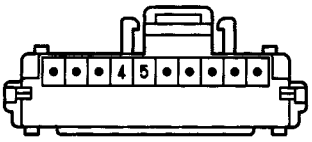

C11 (B) BLUE

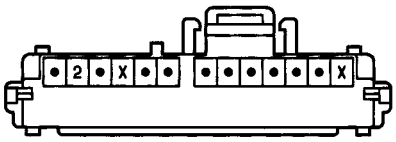

D 1 BLACK

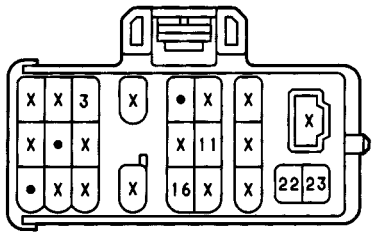

F11

(SEE PAGE 20)

J 1

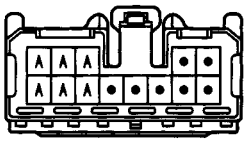

(HINT:SEE PAGE 7)

J 2 BLUE

(HINT:SEE PAGE 7)

J 6

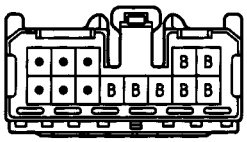

(HINT:SEE PAGE 7)

P 4

S13 BLACK

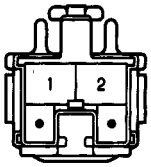

ABS

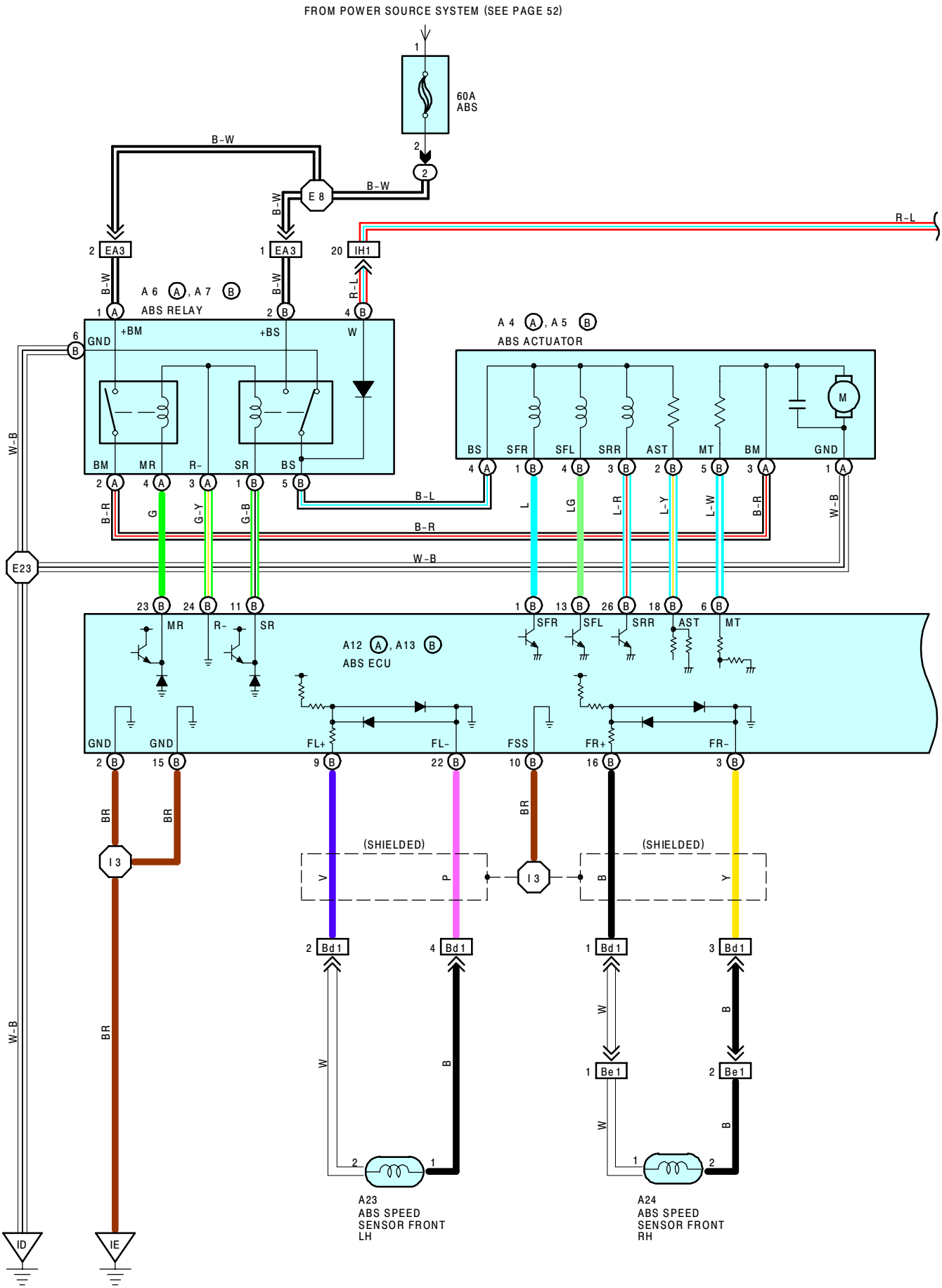
FROM POWER SOURCE SYSTEM (SEE PAGE 52)
60A ABS
B-W
E 8
R-L
EA3
IH1
A 6 A , A 7 B
ABS RELAY
+BM
+BS
W
GND
BM
MR
R-
SR
BS
A 4 A , A 5 B
ABS ACTUATOR
SFR
SFL
SRR
AST
MT
BM
GND
M
B-L
B-R
G
G-Y
G-B
L
LG
L-R
L-Y
L-W
W-B
E23
A12 A , A13 B
ABS ECU
FL+
FL-
FSS
FR+
FR-
BR
I 3
(SHIELDED)
V
P
B
Y
Bd1
Be1
W
B
A23
ABS SPEED SENSOR FRONT LH
A24
ABS SPEED SENSOR FRONT RH
ID
IE

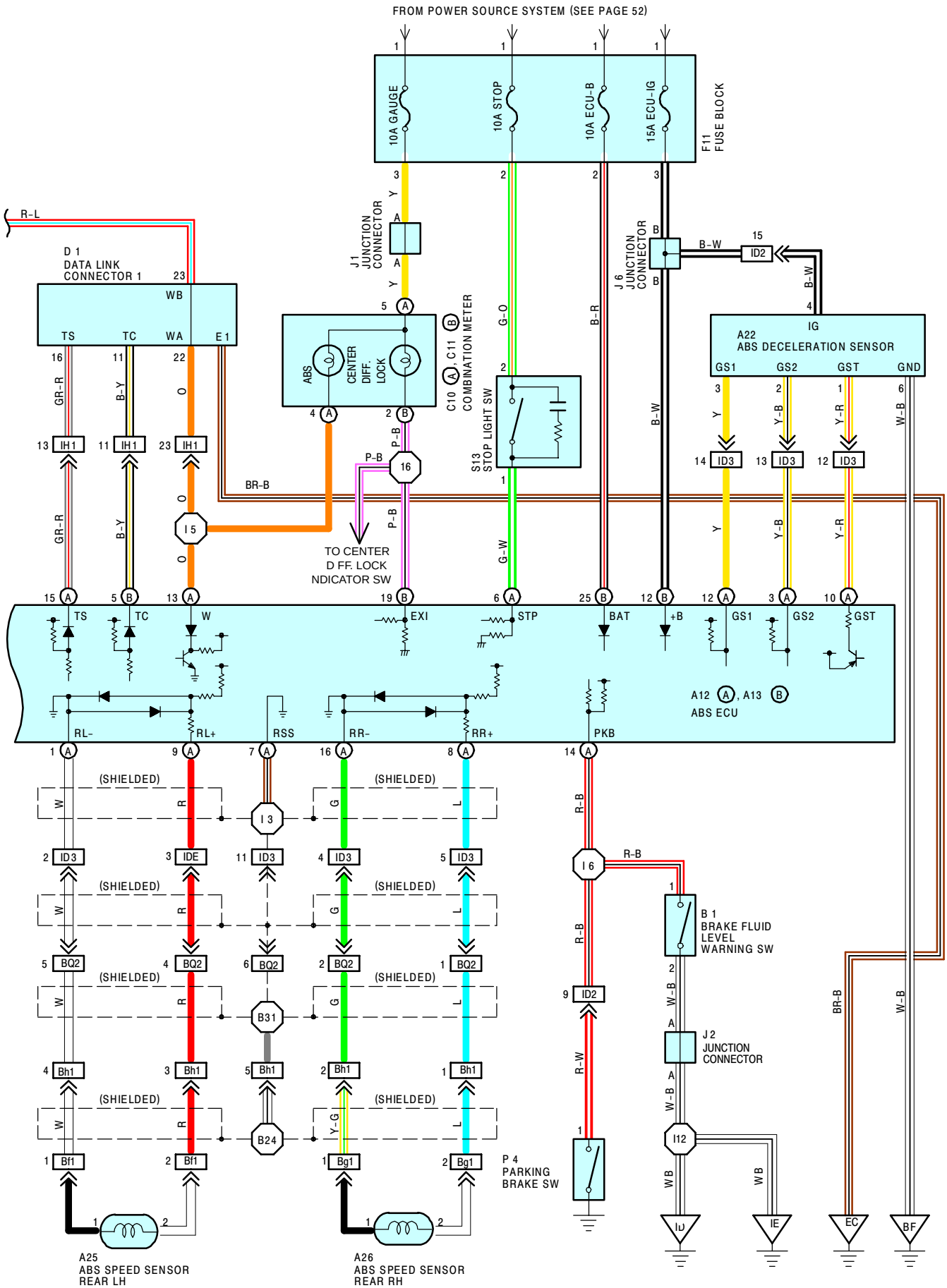
FROM POWER SOURCE SYSTEM (SEE PAGE 52)
10A GAUGE
10A STOP
10A ECU-B
15A ECU-IG
F11 FUSE BLOCK
J1 JUNCTION CONNECTOR
J6 JUNCTION CONNECTOR
R-L
D 1 DATA LINK CONNECTOR 1
TS
TC
WA
E1
WB
ABS
CENTER DIFF. LOCK
C10 (A), C11 (B) COMBINATION METER
S13 STOP LIGHT SW
IG
A22 ABS DECELERATION SENSOR
GS1
GS2
GST
GND
BR-B
TO CENTER DIFF. LOCK INDICATOR SW
EXI
STP
BAT
+B
A12 (A), A13 (B) ABS ECU
RL-
RL+
RSS
RR-
RR+
PKB
(SHIELDED)
A25 ABS SPEED SENSOR REAR LH
A26 ABS SPEED SENSOR REAR RH
P 4 PARKING BRAKE SW
B 1 BRAKE FLUID LEVEL WARNING SW
J 2 JUNCTION CONNECTOR
EC
BF
IE

ABS

SYSTEM OUTLINE

THIS SYSTEM CONTROLS THE RESPECTIVE BRAKE FLUID PRESSURES ACTING ON THE DISC BRAKE CYLINDERS OF THE RIGHT FRONT WHEEL. LEFT FRONT WHEEL AND REAR WHEELS WHEN THE BRAKES ARE APPLIED IN A PANIC STOP SO THAT THE WHEELS DO NOT LOCK. THIS RESULTS IN IMPROVED DIRECTIONAL STABILITY AND STEERABILITY DURING PANIC BRAKING.

1. INPUT SIGNAL

(1) SPEED SENSOR SIGNAL

THE TOP SPEED OF THE WHEELS IS DETECTED AND INPUT TO **TERMINALS FL+, FR+, RL+** AND **RR+** OF THE ABS ECU.

(2) STOP LIGHT SW SIGNAL

A SIGNAL IS INPUT TO **TERMINAL STP** OF THE ABS ECU WHEN BRAKE PEDAL IS DEPRESSED.

(3) PARKING BRAKE SW SIGNAL

A SIGNAL IS INPUT TO **TERMINAL PKB** OF THE ABS ECU WHEN THE PARKING BRAKE SW IS ON.

(4) DECELERATION SENSOR SIGNAL

THE DEGREE OF VEHICLE DECELERATION IS DETECTED AND INPUT TO **TERMINAL GS1, GS2 AND GST** OF THE ABS ECU.

(5) TRANSFER CONTROL SIGNAL

WHILE THE TRANSFER SHIFT LEVER IS IN **L4** POSITION, THE CENTER DIFF. LOCK INDICATOR SW DETECTS A SIGNAL OF CENTER DIFF. LOCK AND THE SIGNAL IS INPUT TO **TERMINAL EXI** OF THE ABS ECU.

2. SYSTEM OPERATION

(TRANSFER L4 POSITION)

WHEN THE TRANSFER SHIFT LEVER IS MOVED TO **L4** POSITION, THE CENTER DIFF. IS LOCKED, THEN THE ABS IS NOT IN OPERATION AND THE ABS WARNING LIGHT IS LIGHTED UP.

(TRANSFER EXCEPT L4 POSITION)

DURING SUDDEN BRAKING, THE ABS ECU WHICH HAS SIGNALS INPUT FROM EACH SENSOR, CONTROLS THE CURRENT TO THE SOLENOID INSIDE THE ACTUATOR, AND CAUSES THE HYDRAULIC PRESSURE ACTING ON EACH WHEEL CYLINDER ESCAPE TO THE RESERVOIR. THE PUMP INSIDE THE ACTUATOR IS ALSO OPERATING AT THIS TIME, AND IT RETURNS THE BRAKE FLUID FROM THE RESERVOIR TO THE MASTER CYLINDER, PREVENTING LOCKING OF THE VEHICLE WHEELS. IF THE ECU JUDGES THAT THE HYDRAULIC PRESSURE ACTING ON THE WHEEL CYLINDER IS INSUFFICIENT, THE CURRENT ACTING ON THE SOLENOID IS CONTROLLED AND THE HYDRAULIC PRESSURE IS INCREASED. HOLDING OF THE HYDRAULIC PRESSURE IS ALSO CONTROLLED BY THE ECU, BY THE SAME METHOD AS ABOVE. BY REPEATED PRESSURE, REDUCTION, HOLDING AND INCREASED ARE REPEATED TO MAINTAIN VEHICLE STABILITY AND IMPROVE STEERABILTY DURING SUDDEN BRAKING.

SERVICE HINTS

A12 (A), A13 (B) ABS ECU

(CONNECTOR THE ECU CONNECTOR)

(A) 15-GROUND : APPROX. **12** VOLTS WITH THE IGNITION SW AT **ON** POSITION AND THE DATA LINK CONNECTOR 1 **TS-E1** NOT CONNECTED

(B) 5-GROUND : APPROX. **12** VOLTS WITH THE IGNITION SW AT **ON** POSITION AND THE DATA LINK CONNECTOR 1 **TC-E1** NOT CONNECTED

(B) 1-GROUND :
(B) 6-GROUND :
(B) 18-GROUND : } APPROX. **12** VOLTS WITH THE IGNITION SW AT **ON** POSITION AND THE ABS WARNING LIGHT GOES OFF
(B) 26-GROUND :
(B) 13-GROUND :

(B) 2-GROUND : ALWAYS CONTINUITY
(B) 15-GROUND : ALWAYS CONTINUITY
(B) 12-GROUND : APPROX. **12** VOLTS WITH THE IGNITION SW AT **ON** POSITION
(A) 6-GROUND : APPROX. **12** VOLTS WITH THE BRAKE PEDAL DEPRESSED
(B) 25-GROUND : ALWAYS APPROX. **12** VOLTS
(A) 14-GROUND : APPROX. **12** VOLTS WITH THE ENGINE RUNNING AND PARKING BRAKE LEVER RELEASED OR BRAKE FLUID LEVEL WARNING SW ON

(DISCONNECT THE ECU CONNECTOR)

(B) 1-**(B)** 18 : APPROX. **6** Ω
(B) 13-**(B)** 18 : APPROX. **6** Ω
(B) 26-**(B)** 18 : APPROX. **6** Ω
(B) 9-**(B)** 22 : **0.9-1.8** KΩ
(B) 16-**(B)** 3 : **0.9-1.8** KΩ
(B) 11- **(B)** 24 : **60-100** Ω
(B) 23-**(B)** 24 : **50-80** Ω
(A) 1-**(A)** 9 : **0.5-1.6** KΩ
(A) 16-**(A)** 8 : **0.5-1.6** KΩ

: PARTS LOCATION

CODE		SEE PAGE	CODE		SEE PAGE	CODE	SEE PAGE
A 4	A	22	**A23**		26	**D 1**	22
A 5	B	22	**A24**		26	**F11**	25
A 6	A	22	**A25**		26	**J 1**	25
A 7	B	22	**A26**		26	**J 2**	25
A12	A	24	**B 1**		22	**J 6**	25
A13	B	24	**C10**	A	24	**P 4**	27
A22		26	**C11**	B	24	**S13**	25

: RELAY BLOCKS

CODE	SEE PAGE	RELAY BLOCKS (RELAY BLOCK LOCATION)
2	18	R/B NO. 2 (FRONT SIDE OF LEFT FENDER)

: CONNECTOR JOINING WIRE HARNESS AND WIRE HARNESS

CODE	SEE PAGE	JOINING WIRE HARNESS AND WIRE HARNESS (CONNECTOR LOCATION)
EA3	30	COWL WIRE AND ENGINE ROOM MAIN WIRE (LEFT FENDER)
ID2	32	COWL WIRE AND FLOOR NO. 1 WIRE (LEFT KICK PANEL)
ID3		
IH1	32	ENGINE WIRE AND COWL WIRE (BEHIND GLOVE BOX)
BQ2	34	FLOOR NO. 3 WIRE AND FLOOR NO. 1 WIRE (LEFT QUARTER PANEL INNER)
Bd1	36	COWL WIRE AND SPEED CONTROL SENSOR NO. 1 WIRE (LEFT KICK PANEL)
Be1	36	SPEED SENSOR NO. 2 WIRE AND SPEED SENSOR NO. 1 WIRE (FRONT AXLE HOUSING LH)
Bf1	36	FRAME NO. 2 WIRE AND SPEED SENSOR NO. 3 WIRE (REAR AXLE HOUSING LH)
Bg1	36	FRAME NO. 2 WIRE AND SPEED SENSOR NO. 4 WIRE (REAR AXLE HOUSING RH)
Bh1	36	FLOOR NO. 3 WIRE AND FRAME NO. 2 WIRE (LEFT QUARTER PANEL INNER)

: GROUND POINTS

CODE	SEE PAGE	GROUND POINTS LOCATION
EC	30	AIR INTAKE CHAMBER
ID	32	LEFT KICK PANEL
IE	32	RIGHT KICK PANEL
BF	34	UNDER THE CENTER CONSOLE BOX

: SPLICE POINTS

CODE	SEE PAGE	WIRE HARNESS WITH SPLICE POINTS	CODE	SEE PAGE	WIRE HARNESS WITH SPLICE POINTS
E 8	30	ENGINE ROOM MAIN WIRE	**I 6**	32	COWL WIRE
E23	30	COWL WIRE	**I12**		
I 3	32		**B24**	36	FLAME NO. 2 WIRE
I 5			**B31**	36	FLOOR NO. 3 WIRE

CRUISE CONTROL

SYSTEM OUTLINE

WITH THE IGNITION SW TURNED ON, THE CURRENT FLOWS THROUGH **GAUGE** FUSE TO **TERMINAL 5** OF THE CRUISE CONTROL INDICATOR LIGHT. THE CURRENT THROUGH **ECU-IG** FUSE FLOWS TO **TERMINAL 14** OF THE CRUISE CONTROL ECU.

WHEN THE IGNITION SW IS ON AND THE CRUISE CONTROL MAIN SW IS TURNED ON, A SIGNAL IS INPUT FROM **TERMINAL 15** OF THE CRUISE CONTROL MAIN SW TO **TERMINAL4** OF THE CRUISE CONTROL ECU. AS A RESULT, THE CRUISE CONTROL ECU FUNCTIONS AND THE CURRENT TO **TERMINAL 14** OF THE CRUISE CONTROL ECU FLOWS TO **TERMINAL 13** OF THE CRUISE CONTROL ECU → **GROUND**, AND THE CRUISE CONTROL SYSTEM IS IN A CONDITION READY FOR OPERATION.

AT THE SAME TIME, THE CURRENT FROM THE **GAUGE** FUSE FLOWS TO **TERMINAL 5** OF THE CRUISE CONTROL INDICATOR LIGHT → **TERMINAL 9** → **TERMINAL 5** OF THE CRUISE CONTROL ECU → **TERMINAL 13** → **GROUND**, CAUSING THE CRUISE CONTROL INDICATOR LIGHT TO LIGHT UP TO INDICATE THAT THE CRUISE CONTROL IS READY FOR OPERATION.

1. SET OPERATION

WHEN THE CRUISE CONTROL MAIN SW IS TURNED ON AND THE SET SW IS PUSHED WITH THE VEHICLE SPEED WITHIN THE SET LIMIT (APPROX. **36** KM/H, **22** MPH TO **200** KM/H, **124** MPH), A SIGNAL IS INPUT TO **TERMINAL 18** OF THE CRUISE CONTROL ECU AND THE VEHICLE SPEED AT THE TIME THE SET SW IS RELEASED IS MEMORIZED IN THE ECU AS THE SET SPEED.

2. SET SPEED CONTROL

DURING CRUISE CONTROL DRIVING, THE CRUISE CONTROL ECU COMPARES THE SET SPEED MEMORIZED IN THE CRUISE CONTROL ECU WITH THE ACTUAL VEHICLE SPEED INPUT INTO **TERMINAL 20** OF THE CRUISE CONTROL ECU FROM THE COMBINATION METER, AND CONTROLS THE CRUISE CONTROL ACTUATOR TO MAINTAIN THE SET SPEED.
WHEN THE ACTUAL SPEED IS LOWER THAN THE SET SPEED, THE ECU CAUSES THE CURRENT TO THE CRUISE CONTROL ACTUATOR TO FLOW FROM **TERMINAL 12** OF THE CRUISE CONTROL ECU → **TERMINAL 6** OF THE CRUISE CONTROL ACTUATOR → **TERMINAL 7** → **TERMINAL 11** OF THE CRUISE CONTROL ECU. AS A RESULT, THE MOTOR IN THE CRUISE CONTROL ACTUATOR IS ROTATED TO OPEN THE THROTTLE VALVE, AND THE THROTTLE CABLE IS PULLED TO INCREASE THE VEHICLE SPEED. WHEN THE ACTUAL DRIVING SPEED IS HIGHER THAN THE SET SPEED, THE CURRENT TO CRUISE CONTROL ACTUATOR FLOWS FROM **TERMINAL 11** OF THE CRUISE CONTROL ECU → **TERMINAL 7** OF THE CRUISE CONTROL ACTUATOR → **TERMINAL 6** → **TERMINAL 12** OF THE CRUISE CONTROL ECU.
THIS CAUSES THE MOTOR IN THE CRUISE CONTROL ACTUATOR TO ROTATE TO CLOSE THE THROTTLE VAVLE AND RETURN THE THROTTLE CABLE TO DECREASE THE VEHICLE SPEED.

3. COAST CONTROL

DURING CRUISE CONTROL DRIVING, WHILE THE COAST SW IS ON, THE CRUISE CONTROL ACTUATOR RETURNS THE THROTTLE CABLE TO CLOSE THE THROTTLE VALVE AND DECREASE THE DRIVING SPEED. THE VEHICLE SPEED WHEN THE COAST SWITCH IS TURNED OFF IS MEMORIZED, AND THE VEHICLE CONTINUES AT THE NEW SET SPEED.

4. ACCEL CONTROL

DURING CRUISE CONTROL DRIVING, WHILE THE ACCEL SW IS TURNED ON, THE CRUISE CONTROL ACTUATOR PULLS THE THROTTLE CABLE TO OPEN THE THROTTLE VALVE AND INCREASE THE DRIVING SPEED. THE VEHICLE SPEED WHEN THE ACCEL SW IS TURNED OFF IS MEMORIZED, AND THE VEHICLE CONTINUES AT THE NEW SET SPEED.

5. RESUME CONTROL

UNLESS THE VEHICLE SPEED FALLS BELOW THE MINIMUM SPEED LIMIT (APPROX. **40** KM/H, **25** MPH) AFTER CANCELING THE SET SPEED BY THE CANCEL SW, PUSHING THE RESUME SW WILL CAUSE THE VEHICLE TO RESUME THE SPEED SET BEFORE CANCELLATION.

6. MANUAL CANCEL MECHANISM

IF ANY OF THE FOLLOWING OPERATIONS OCCURS DURING CRUISE CONTROL OPERATION, THE MAGNETIC CLUTCH OF THE ACTUATOR MOTOR TURNS OFF, THE MOTOR ROTATES TO CLOSE THE THROTTLE VALVE, AND THE CRUISE CONTROL IS RELEASED.

* PLACING THE IGNITION SW AT **ST** POSITION. “SIGNAL INPUT TO **TERMINAL 2** OF THE CRUISE CONTROL ECU”
* DEPRESSING BRAKE PEDAL (STOP LIGHT SW ON). “SIGNAL INPUT TO **TERMINAL 16** OF THE CRUISE CONTROL ECU”
* PUSH THE CANCEL SW (CANCEL SW ON). “SIGNAL INPUT TO **TERMINAL 18** OF THE CRUISE CONTROL ECU”
* PUSH THE MAIN SWITCH (MAIN SW OFF) “SIGNAL INPUT TO **TERMINAL 4** OF THE CRUISE CONTROL ECU”

7. AUTO CANCEL FUNCTION

A) IF ANY OF THE FOLLOWING OPERATING CONDITIONS OCCURS DURING CRUISE CONTROL OPERATION, THE SET SPEED IS ERASED, THE CURRENT FLOW TO MAGNETIC CLUTCH IS STOPPED, AND THE CRUISE CONTROL IS RELEASED. (MAIN SW TURNS OFF).

WHEN THIS OCCURS, THE IGNITION SW MUST BE TURNED OFF ONCE BEFORE THE MAIN SWITCH WILL TURN ON.

- OVER CURRENT TO TRANSISTER DRIVING MOTOR AND/OR MAGNETIC CLUTCH.
- WHEN CURRENT CONTINUED TO FLOW TO THE MOTOR INSIDE THE ACTUATOR IN THE THROTTLE VALVE “OPEN” DIRECTION.
- OPEN CIRCUIT IN MAGNETIC CLUTCH.
- MOMENTARY INTERRUPTION OF VEHICLE SPEED SIGNAL.
- SHORT CIRCUIT IN CRUISE CONTROL SW.
- MOTOR DOES NOT OPERATE DESPITE THE MOTOR DRIVE SIGNAL BEING OUTPUT.

B) IF ANY OF THE FOLLOWING CONDITIONS OCCURS DURING CRUISE CONTROL OPERATION, THE SET SPEED IS ERASED, AND THE CRUISE CONTROL IS RELEASED. (THE POWER OF MAGNETIC CLUTCH IS CUT OFF UNTIL THE SET SW IS “ON” AGAIN.)

- WHEN THE VEHICLE SPEED FALLS BELOW THE MINIMUM SPEED LIMIT, APPROX. **40** KM/H (**25** MPH)
- WHEN THE VEHICLE SPEED FALLS MORE THAN **16** KM/H (**10** MPH) BELOW THE SET SPEED, E.G. ON AN UPWARD SLOPE.
- WHEN POWER TO THE CRUISE CONTROL SYSTEM IS MOMENTARILY CUT OFF.

8. AUTOMATIC TRANSMISSION CONTROL FUNCTION

- IN OVERDRIVE, IF THE VEHICLE SPEED BECOMES LOWER THAN THE OVERDRIVE CUT SPEED (SET SPEED MINUS APPROX. **4** KM/H, **2.5** MPH) DURING CRUISE CONTROL OPERATION, SUCH AS DRIVING UP A HILL, THE OVERDRIVE IS RELEASED AND THE POWER INCREASED TO PREVENT A REDUCTION IN VEHICLE SPEED.

- AFTER RELEASING THE OVERDRIVE, VEHICLE SPEED BECOMES HIGHER THAN THE OVERDRIVE RETURN SPEED (SET SPEED MINUS APPROX. **2** KM/H, **1.2** MPH), THE ECU JUDGES BY THE SIGNALS FROM POTENTIONMETER OF THE ACTUATOR THAT THE UPWARD SLOPE HAS FINISHED, AND OVERDRIVE IS RESUMED AFTER APPROXIMATELY **6** SECONDS.

- DURING CRUISE CONTROL DRIVING, THE CRUISE CONTROL OPERATION SIGNAL IS OUTPUT FROM THE CRUISE CONTROL ECU TO THE ENGINE CONTROL MODULE ECU UPON RECEIVING THIS SIGNAL, SO THE ENGINE CONTROL MODULE ECU CHANGES THE SHIFT PATTERN TO NORMAL.

TO MAINTAIN SMOOTH CRUISE CONTROL OPERATION (ON A DOWNWARD SLOPE, ETC.), LOCK-UP RELEASE OF THE TRANSMISSION WHEN THE IDLING POINT OF THE THROTTLE POSITION IS “ON” IS FORBIDDEN.

SERVICE HINTS

C4 CRUISE CONTROL ACTUATOR

1-3 : APPROX. **2** KΩ
5-4 : APPROX. **38.5** Ω

C17 CRUISE CONTROL ECU

14-GROUND : APPROX. **12** VOLTS WITH THE IGNITION SW AT **ON** POSITION
15-GROUND : ALWAYS APPROX. **12** VOLTS
20-GROUND : **4** PULSE WITH **1** ROTATION OF ROTOR SHAFT
18-GROUND : APPROX. **418** Ω WITH THE CANCEL SW ON IN THE CONTROL SW
APPROX. **68** Ω WITH THE RES/ACC SW ON IN THE CONTROL SW
APPROX. **198** Ω WITH THE SET/COAST SW ON IN THE CONTROL SW
4-GROUND : CONTINUITY WITH THE MAIN SW ON IN THE CONTROL SW
13-GROUND : ALWAYS CONTINUITY

CRUISE CONTROL

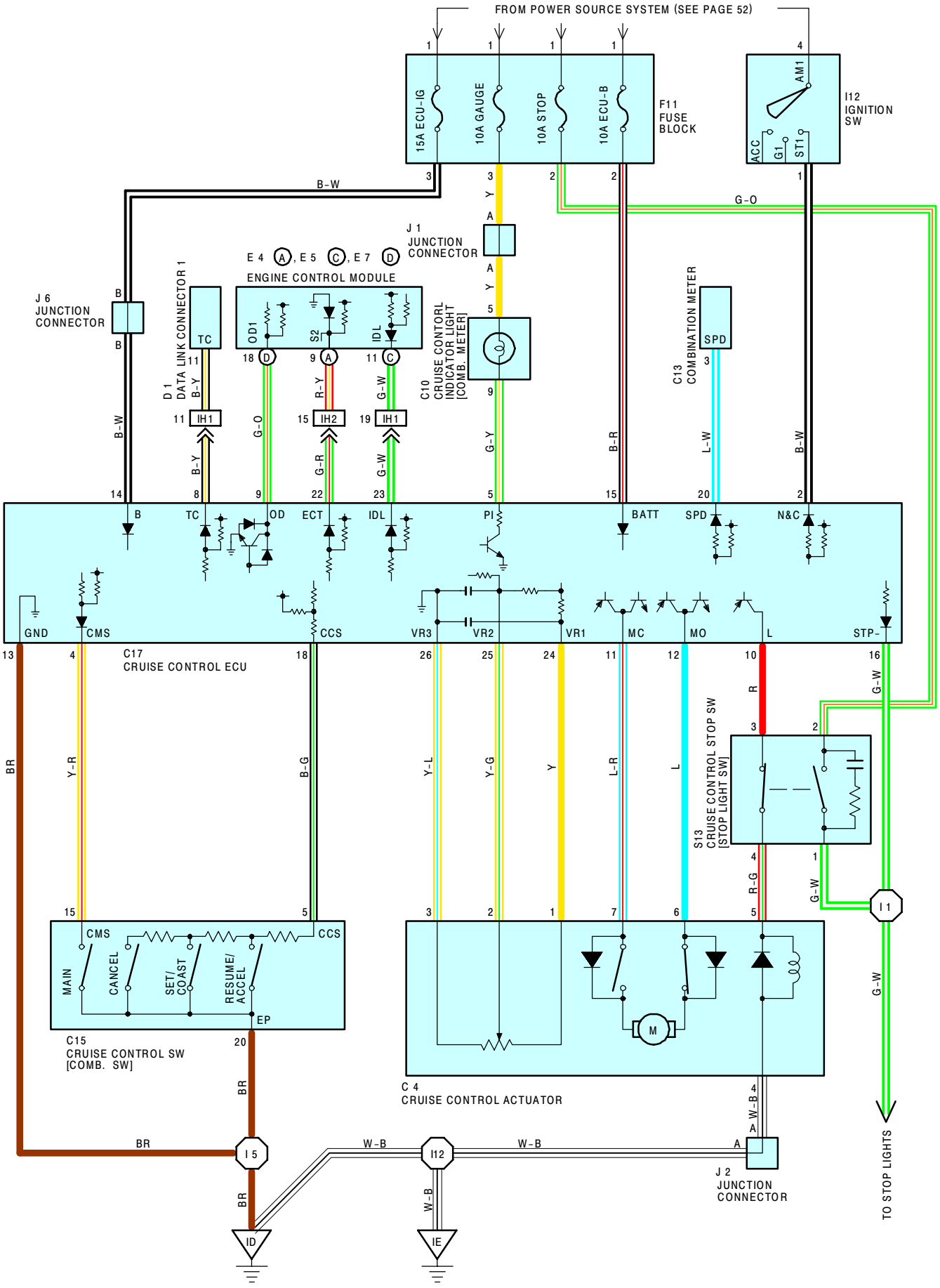

: PARTS LOCATION

CODE	SEE PAGE	CODE	SEE PAGE	CODE	SEE PAGE
C 4	22	**D 1**	22	**I12**	25
C10	24	**E 4** A	24	**J 1**	25
C13	24	**E 5** C	24	**J 2**	25
C15	24	**E 7** D	24	**J 6**	25
C17	24	**F11**	25	**S13**	25

: CONNECTOR JOINING WIRE HARNESS AND WIRE HARNESS

CODE	SEE PAGE	JOINING WIRE HARNESS AND WIRE HARNESS (CONNECTOR LOCATION)
IH1	32	ENGINE WIRE AND COWL WIRE (BEHIND GLOVE BOX)
IH2		

: GROUND POINTS

CODE	SEE PAGE	GROUND POINTS LOCATION
ID	32	LEFT KICK PANEL
IE	32	RIGHT KICK PANEL

: SPLICE POINTS

CODE	SEE PAGE	WIRE HARNESS WITH SPLICE POINTS	CODE	SEE PAGE	WIRE HARNESS WITH SPLICE POINTS
I 1	32	COWL WIRE	**I12**	32	COWL WIRE
I 5					

C 4 GRAY

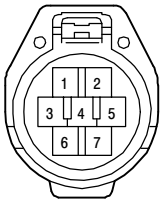

C10 GRAY

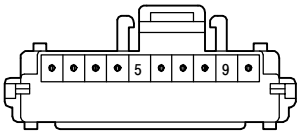

C13

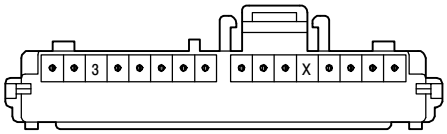

C15 BLACK

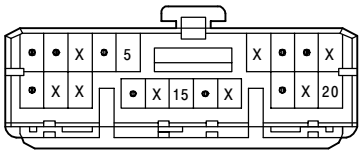

C17 GRAY

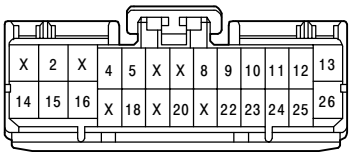

D 1 BLACK

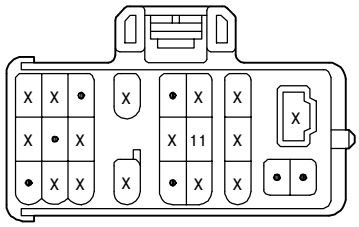

E 4 (A) DARK GRAY

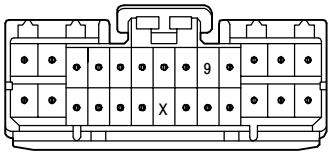

E 5 (C) DARK GRAY

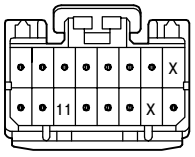

E 7 (D) DARK GRAY

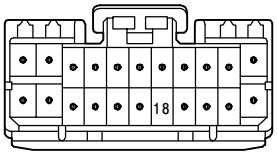

F11

(SEE PAGE 20)

I12 BLACK

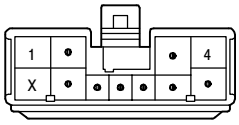

J 1

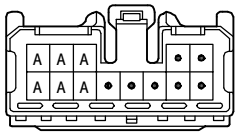

(HINT : SEE PAGE 7)

J 2 BLUE

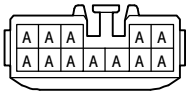

(HINT : SEE PAGE 7)

J 6

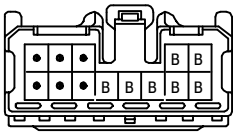

(HINT : SEE PAGE 7)

S13 BLACK

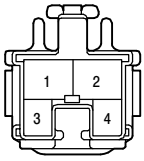

ECT PRND2L ELECTRONICALLY CONTROLLED TRANSMISSION

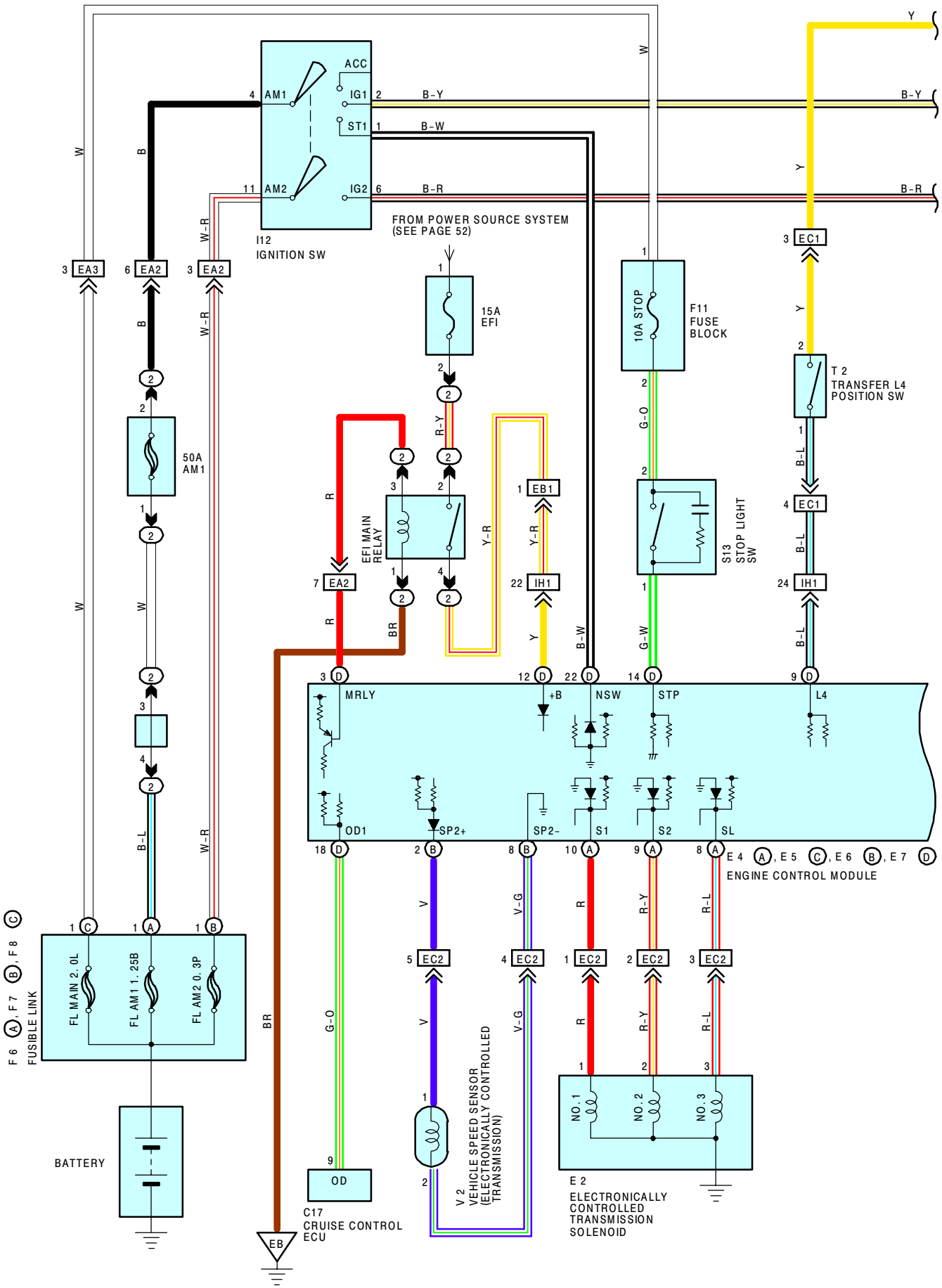

AND A/T INDICATOR

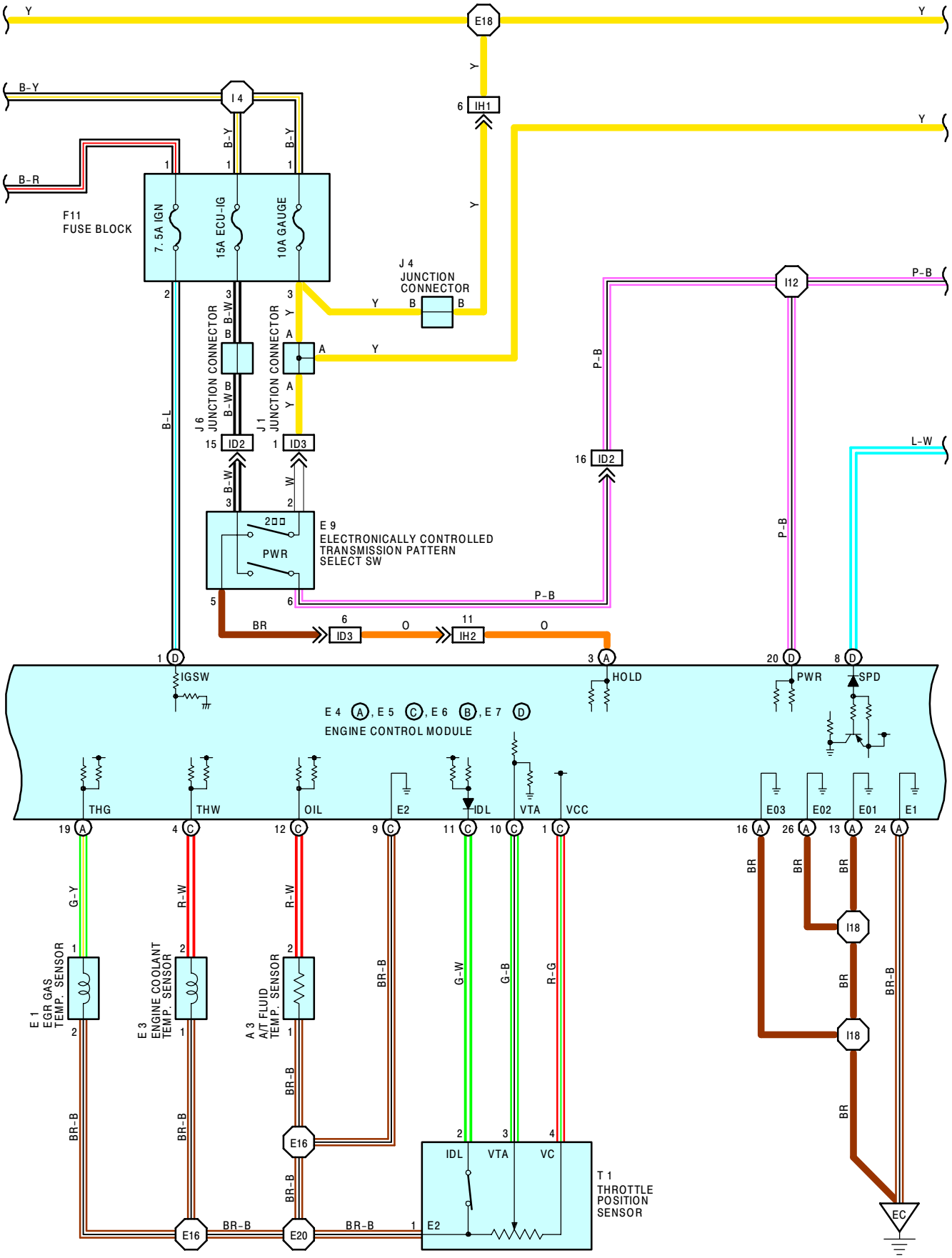

Brought to you by BirfMark

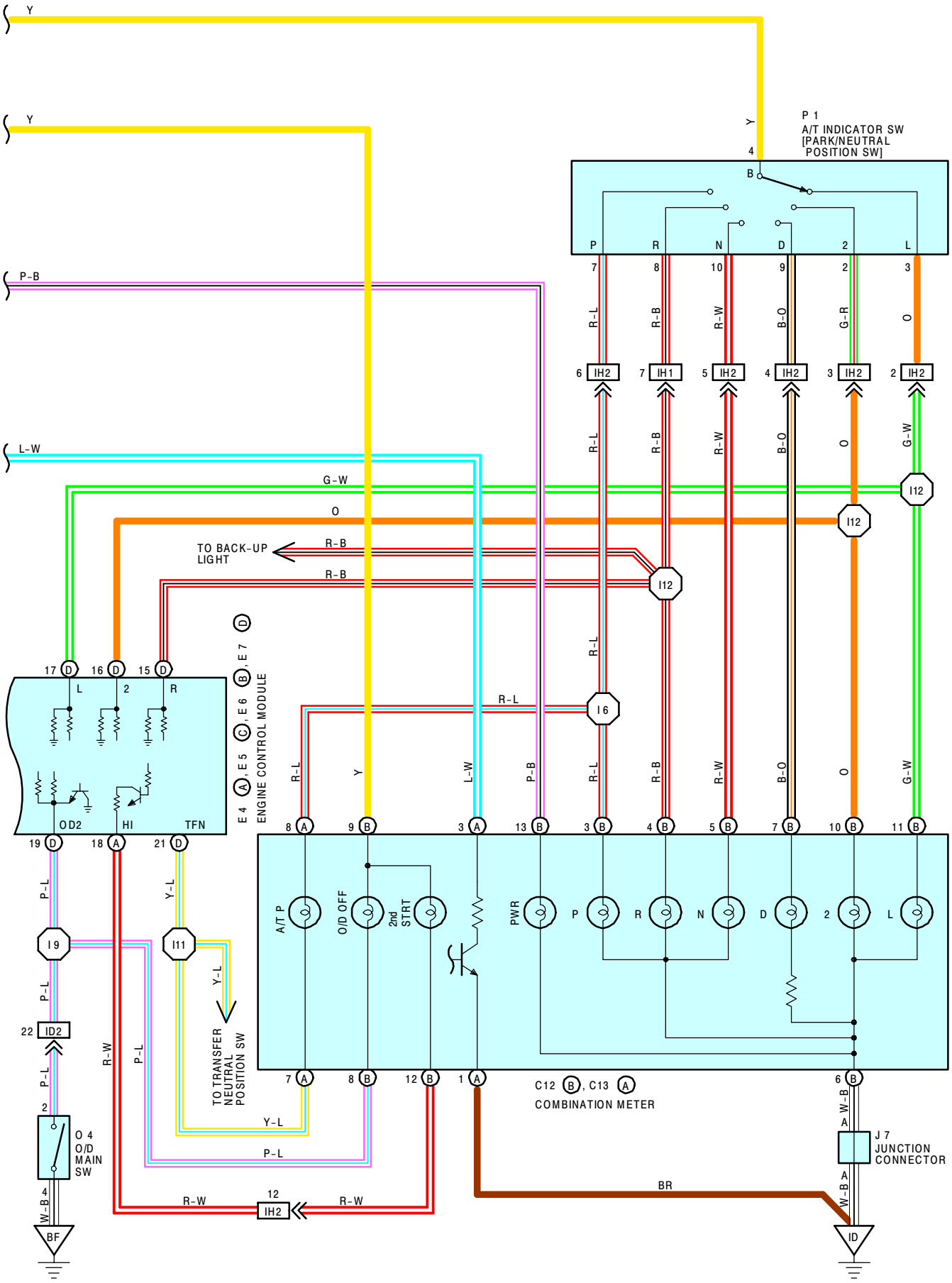

Brought to you by BirfMark

Brought to you by BirfMark

AND A/T INDICATOR

SYSTEM OUTLINE

PREVIOUS AUTOMATIC TRANSMISSION HAVE SELECTED EACH GEAR SHIFT USING MECHANICALLY CONTROLLED THROTTLE HYDRAULIC PRESSURE, GOVERNOR HYDRAULIC PRESSURE AND LOCK-UP HYDRAULIC PRESSURE. THE ELECTRONICALLY CONTROLLED TRANSMISSION, HOWEVER, ELECTRICALLY CONTROLS THE GOVERNOR PRESSURE AND LOCK-UP PRESSURE THROUGH THE SOLENOID VALVE. THE ENGINE CONTROL MODULE OF THE SOLENOID VALVE BASED ON THE INPUT SIGNALS FROM EACH SENSOR MAKES SMOOTH DRIVING POSSIBLE BY SHIFT SELECTION FOR EACH GEAR WHICH IS MOST APPROPRIATE TO THE DRIVING CONDITIONS AT THAT TIME.

1. GEAR SHIFT OPERATION

DURING DRIVING, THE ENGINE CONTROL MODULE SELECTS THE SHIFT FOR EACH GEAR WHICH IS MOST APPROPRIATE TO THE DRIVING CONDITIONS, BASED ON INPUT SIGNALS FROM THE ENGINE COOLANT TEMP. SENSOR TO **TERMINAL THW** OF THE ENGINE CONTROL MODULE, AND ALSO THE INPUT SIGNALS TO **TERMINAL SP2+** OF THE ENGINE CONTROL MODULE FROM THE VEHICLE SPEED SENSOR DEVOTED TO THE ELECTRONICALLY CONTROLLED TRANSMISSION. THE CURRENT IS THEN OUTPUT TO THE ELECTRONICALLY CONTROLLED TRANSMISSION SOLENOIDS. WHEN SHIFTING TO 1ST SPEED, THE CURRENT FLOWS FROM **TERMINAL S1** OF THE ENGINE CONTROL MODULE TO **TERMINAL 1** OF THE ELECTRONICALLY CONTROLLED TRANSMISSION SOLENOID → **GROUND**, AND CONTINUITY TO THE NO. 1 SOLENOID CAUSES THE SHIFT. FOR 2ND SPEED, THE CURRENT FLOWS FROM **TERMINAL S1** OF THE ENGINE CONTROL MODULE TO **TERMINAL 1** OF THE ELECTRONICALLY CONTROLLED TRANSMISSION SOLENOIDS → **GROUND** AND FROM **TERMINAL S2** OF THE ENGINE CONTROL MODULE TO **TERMINAL 2** OF THE ELECTRONICALLY CONTROLLED TRANSMISSION SOLENOID → **GROUND**, AND CONTINUITY TO NO. 1 AND NO. 2, SOLENOIDS CAUSES THE SHIFT. FOR 3RD SPEED, THERE IS NO CONTINUITY TO NO. 1 SOLENOID, ONLY TO NO. 2, CAUSING THE SHIFT. SHIFTING INTO 4TH SPEED (OVERDRIVE) TAKES PLACE WHEN THERE IS NO CONTINUITY TO EITHER NO. 1 OR NO. 2 SOLENOID.

2. LOCK-UP OPERATION

WHEN THE ENGINE CONTROL MODULE JUDGES FROM EACH SIGNAL THAT LOCK-UP OPERATION CONDITIONS HAVE BEEN MET, THE CURRENT FLOWS FROM **TERMINAL SL** OF THE ENGINE CONTROL MODULE TO **TERMINAL 3** OF THE ELECTRONICALLY CONTROLLED TRANSMISSION SOLENOID → **GROUND**, CAUSING CONTINUITY TO THE LOCK-UP SOLENOID AND CAUSING LOCK-UP OPERATION.

3. STOP LIGHT SW CIRCUIT

IF THE BRAKE PEDAL IS DEPRESSED (STOP LIGHT SW ON) WHEN DRIVING IN LOCK-UP CONDITION, A SIGNAL IS INPUT TO **TERMINAL STP** OF THE ENGINE CONTROL MODULE, AND THE ENGINE CONTROL MODULE OPERATES AND CONTINUITY TO THE LOCK-UP SOLENOID IS CUT.

4. OVERDRIVE CIRCUIT

***** O/D MAIN SW ON

WHEN THE O/D MAIN SW IS TURNED ON (SW POINT IS OPEN), A SIGNAL IS INPUT TO **TERMINAL OD2** OF THE ENGINE CONTROL MODULE, AND ENGINE CONTROL MODULE OPERATION CAUSES GEAR SHIFT WHEN THE CONDITIONS FOR OVERDRIVE ARE MET.

***** O/D MAIN SW OFF

WHEN THE O/D MAIN SW IS TURNED OFF (SW POINT IS CLOSED), THE CURRENT FROM THE O/D OFF INDICATOR LIGHT FLOWS THROUGH THE O/D MAIN SW TO **GROUND**, CAUSING THE INDICATOR LIGHT TO LIGHT UP. AT THE SAME TIME, A SIGNAL IS INPUT TO **TERMINAL OD2** OF THE ENGINE CONTROL MODULE, AND THE ENGINE CONTROL MODULE OPERATION PREVENTS SHIFT INTO OVERDRIVE.

5. ELECTRONICALLY CONTROLLED TRANSMISSION PATTERN SELECT SW CIRCUIT

IF THE ELECTRONICALLY CONTROLLED TRANSMISSION PATTERN SELECT SW IS CHANGED FROM NORMAL TO POWER, THE CURRENT THROUGH THE POWER INDICATOR FLOWS TO **GROUND**, AND FLOWS TO **TERMINAL PWR** OF THE ENGINE CONTROL MODULE, THE ENGINE CONTROL MODULE OPERATES, AND SHIFT UP AND SHIFT DOWN OCCUR AT HIGHER VEHICLE SPEEDS THAN WHEN THE SW IS IN NORMAL POSITION.

6. TRANSFER SHIFT OPERATION

WHEN THE TRANSFER SHIFT LEVER IS MOVED TO **L4** POSITION, A SIGNAL FROM TRANSFER **L4** POSITION SW IS INPUT TO THE **TERMINAL L4** OF THE ENGINE CONTROL MODULE, THEN SHIFT TO L4 OCCURS.

Brought to you by BirfMark

Brought to you by BirfMark

ELECTRONICALLY CONTROLLED TRANSMISSION

SERVICE HINTS

E 4 (A), E 5 (C), E 6 (B), E 7 (D) ENGINE CONTROL MODULE

STP	-GND	: **7.5- 14.0** VOLTS WITH BRAKE PEDAL IS DEPRESSED
		0- 1.5 VOLTS WITH THE BRAKE PEDAL IS RELEASED
TFN	-GRD	: **0- 3.0** VOLTS WITH THE TRANSFER POSITION AT **N** POSITION
		9.0- 14.0 VOLTS WITH THE TRANSFER POSITION AT EXCEPT **N** POSITION
OD2	-GRD	: **0- 3.0** VOLTS WITH THE O/D MAIN SW TURNED ON
		9.0- 14.0 VOLTS WITH THE O/D MAIN SW TURNED OFF
OD1	-GND	: **9.0- 14.0** VOLTS WITH THE IGNITION SW ON
SP2+	-SP2-	: PULSE GENERATION WITH VEHICLE MOVING
SPD	-GND	: PULSE GENERATION WITH VEHICLE MOVING
IDL	-GND	: **0- 3.0** VOLTS WITH THE THROTTLE VALVE FULLY CLOSED
		9.0- 14.0 VOLTS WITH THE THROTTLE VALVE FULLY OPEN
VTA	-GND	: **3.5- 4.5** VOLTS WITH THE THROTTLE VALVE FULLY CLOSED
		2.5- 3.5 VOLTS WITH THE THROTTLE VALVE FULLY OPEN
2	-GND	: **7.5- 14.0** VOLTS WITH THE SHIFT LEVER AT **2** POSITION
		0- 1.5 VOLTS WITH THE SHIFT LEVER AT EXCEPT **2** POSITION
L	-GND	: **7.5- 14.0** VOLTS WITH THE SHIFT LEVER AT **L** POSITION
		0- 1.5 VOLTS WITH THE SHIFT LEVER AT EXCEPT **L** POSITION
R	-GND	: **7.5- 14.0** VOLTS WITH THE SHIFT LEVER AT **R** POSITION
		0- 1.5 VOLTS WITH THE SHIFT LEVER AT EXCEPT **R** POSITION
PWR	-GND	: **7.5- 14.0** VOLTS WITH THE PATTERN SELECT SW AT **PWR** POSITION
		0- 1.5 VOLTS WITH THE PATTERN SELECT SW AT **NORMAL** POSITION
L4	-GND	: **7.5- 14.0** VOLTS WITH THE TRANSFER POSITION AT **L4** POSITION
		0- 1.5 VOLTS WITH THE TRANSFER POSITION AT EXCEPT **L4** POSITION

E 2 ELECTRONICALLY CONTROLLED TRANSMISSION SOLENOID

1, 2, 3-GROUND : **11- 15** Ω

E 9 ELECTRONICALLY CONTROLLED TRANSMISSION PATTERN SELECT SW

3-6 : CLOSED WITH THE ELECTRONICALLY CONTROLLED TRANSMISSION PATTERN SELECT SW AT **PWR** POSITION

O 4 O/D MAIN SW

2-4 : OPEN WITH THE O/D MAIN SW AT **ON** POSITION
CLOSED WITH THE O/D MAIN SW AT **OFF** POSITION

Brought to you by BirfMark

AND A/T INDICATOR

: PARTS LOCATION

CODE	SEE PAGE	CODE	SEE PAGE	CODE	SEE PAGE
A 3	22	E 7 D	24	J 7	25
C12 B	24	E 9	26	O 4	27
C13 A	24	F 6 A	22	P 1	23
C17	24	F 7 B	22	S13	25
E 1	22	F 8 C	22	T 1	23
E 2	22	F11	25	T 2	23
E 3	22	I12	25	V 2	23
E 4 A	24	J 1	25		
E 5 C	24	J 4	25		
E 6 B	24	J 6	25		

: RELAY BLOCKS

CODE	SEE PAGE	RELAY BLOCKS (RELAY BLOCK LOCATION)
2	18	R/B NO. 2 (FRONT SIDE OF LEFT FENDER)

: CONNECTOR JOINING WIRE HARNESS AND WIRE HARNESS

CODE	SEE PAGE	JOINING WIRE HARNESS AND WIRE HARNESS (CONNECTOR LOCATION)
EA2	30	COWL WIRE AND ENGINE ROOM MAIN WIRE (LEFT FENDER)
EA3		
EB1	30	ENGINE ROOM MAIN WIRE AND ENGINE WIRE (NEAR THE DISTRIBUTOR)
EC1	30	ENGINE WIRE AND TRANSMISSION WIRE (NEAR THE STARTER)
EC2		
ID2	32	COWL WIRE AND FLOOR NO. 1 WIRE (LEFT KICK PANEL)
ID3		
IH1	32	ENGINE WIRE AND COWL WIRE (BEHIND GLOVE BOX)
IH2		

: GROUND POINTS

CODE	SEE PAGE	GROUND POINTS LOCATION
EB	30	FRONT SIDE OF LEFT FENDER
EC	30	AIR INTAKE CHAMBER
ID	32	KEFT KICK PANEL
BF	34	UNDER THE CENTER CONSOLE BOX

: SPLICE POINTS

CODE	SEE PAGE	WIRE HARNESS WITH SPLICE POINTS	CODE	SEE PAGE	WIRE HARNESS WITH SPLICE POINTS
E16	30	ENGINE WIRE	I 9	32	COWL WIRE
E18			I11		
E20			I12		
I 4	32	COWL WIRE	I18	32	ENGINE WIRE
I 6					

Brought to you by BirfMark

ELECTRONICALLY CONTROLLED TRANSMISSION

A 3

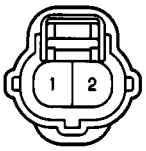

C12 (B) BROWN

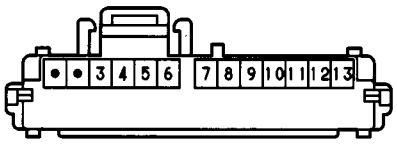

C13 (A)

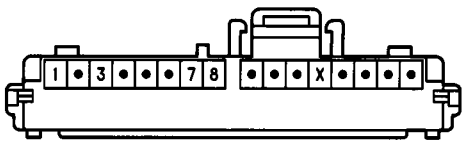

C17 GRAY

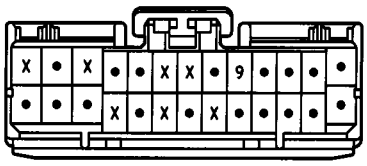

E 1 DARK GRAY

E 2 BLACK

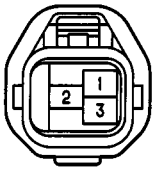

E 3 GREEN

E 4 (A) DARK GRAY

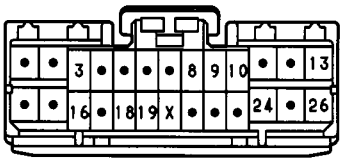

E 5 (C) DARK GRAY

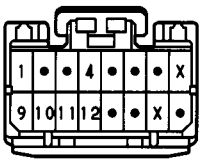

E 6 (B) DARK GRAY

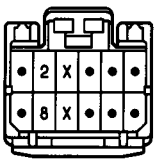

E 7 (D) DARK GRAY

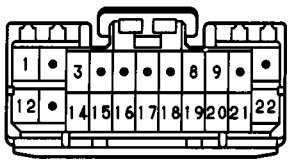

E 9

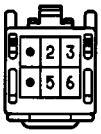

F 6 (A), F 8 (C)

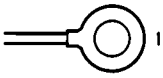

F 7 (B) GRAY

F11

(SEE PAGE 20)

I12 BLACK

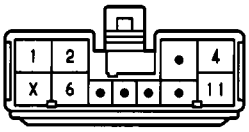

J 1

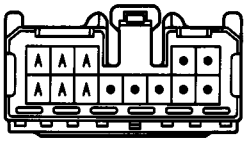

(HINT:SEE PAGE 7)

J 4

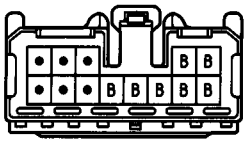

(HINT:SEE PAGE 7)

J 6

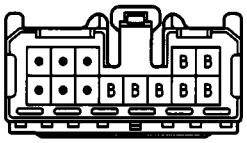

(HINT:SEE PAGE 7)

Brought to you by BirfMark

AND A/T INDICATOR

J 7 BLUE

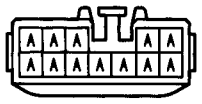

(HINT:SEE PAGE 7)

O 4 BLUE

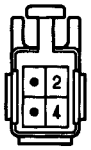

P 1 GRAY

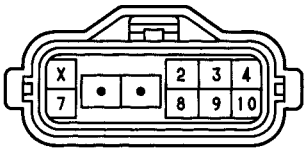

S13 BLACK

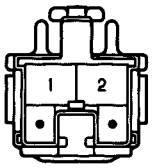

T 1 BLACK

T 2 GRAY

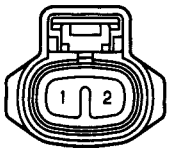

V 2 BLACK

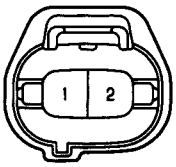

Brought to you by BirfMark

REAR WINDOW DEFOGGER

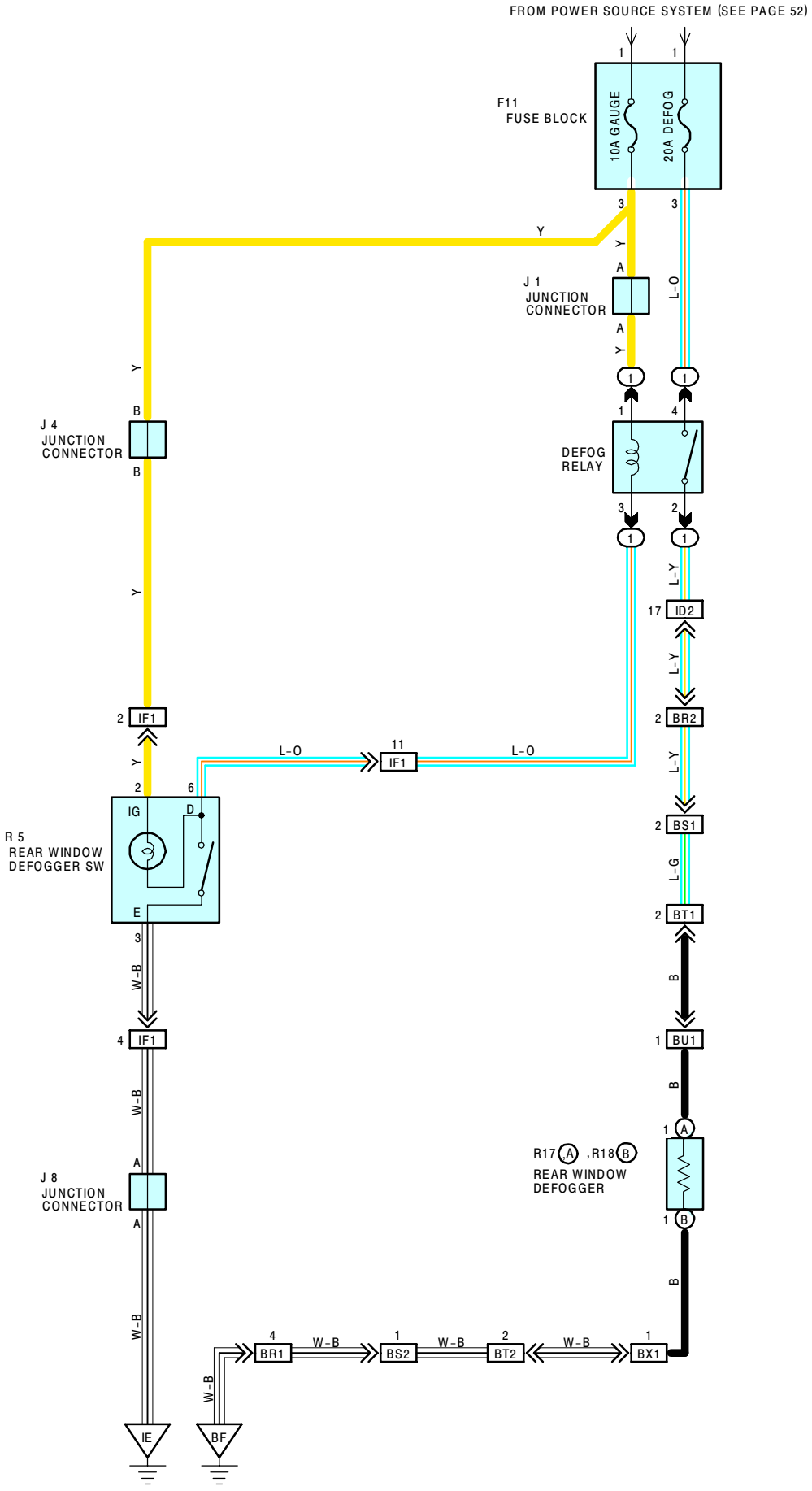

Brought to you by BirfMark

SERVICE HINTS

DEFOG RELAY

(1) 4 - **(1)** 2 : CLOSED WITH THE IGNITION SW ON AND THE REAR WINDOW DEFOGGER SW ON

R 5 REAR WINDOW DEFOGGER SW

2, 6-GROUND : APPROX. **12** VOLTS WITH THE IGNITION SW AT **ON** POSITION

3-GROUND : ALWAYS CONTINUITY

○ : PARTS LOCATION

CODE	SEE PAGE	CODE	SEE PAGE	CODE	SEE PAGE
F11	25	**J 8**	25	**R18** B	27
J1	25	**R 5**	25		
J4	25	**R17** A	27		

⬭ : RELAY BLOCKS

CODE	SEE PAGE	RELAY BLOCKS (RELAY BLOCK LOCATION)
1	20	R/B NO. 1 (LEFT KICK PANEL)

▭ : CONNECTOR JOINING WIRE HARNESS AND WIRE HARNESS

CODE	SEE PAGE	JOINING WIRE HARNESS AND WIRE HARNESS (CONNECTOR LOCATION)
ID2	32	COWL WIRE AND FLOOR NO. 1 WIRE (LEFT KICK PANEL)
IF1	32	COWL WIRE AND INSTRUMENT PANEL WIRE (INSTRUMENT PANEL CENTER)
BR1	34	LUGGAGE ROOM NO. 1 WIRE AND FLOOR NO. 1 WIRE (LEFT QUARTER PANEL INNER)
BR2		
BS1	34	BACK DOOR NO. 1 WIRE AND LUGGAGE ROOM NO. 1 WIRE (LEFT REAR SIDE OF ROOF)
BS2		
BT1	36	BACK DOOR NO. 1 WIRE AND BACK DOOR NO. 2 WIRE (BACK DOOR LEFT)
BT2		
BU1	36	REAR WINDOW NO. 1 WIRE AND BACK DOOR NO. 2 WIRE (BACK DOOR LEFT)
BX1	36	REAR WINDOW NO. 1 WIRE AND BACK DOOR NO. 2 WIRE (BACK DOOR RIGHT)

▽ : GROUND POINTS

CODE	SEE PAGE	GROUND POINTS LOCATION
IE	32	RIGHT KICK PANEL
BF	34	UNDER THE CENTER CONSOLE BOX

F11

(SEE PAGE 20)

J 1

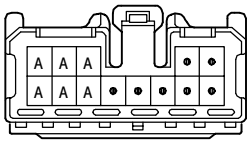

(HINT : SEE PAGE 7)

J 4

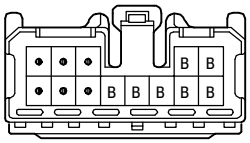

(HINT : SEE PAGE 7)

J 8 BLUE

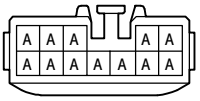

(HINT : SEE PAGE 7)

R 5 BLACK

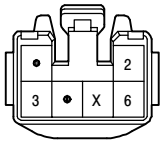

R17 Ⓐ, R18 Ⓑ BLACK

UNLOCK AND SEAT BELT WARNING

*1 : W/ POWER SEAT
*2 : W/O POWER SEAT

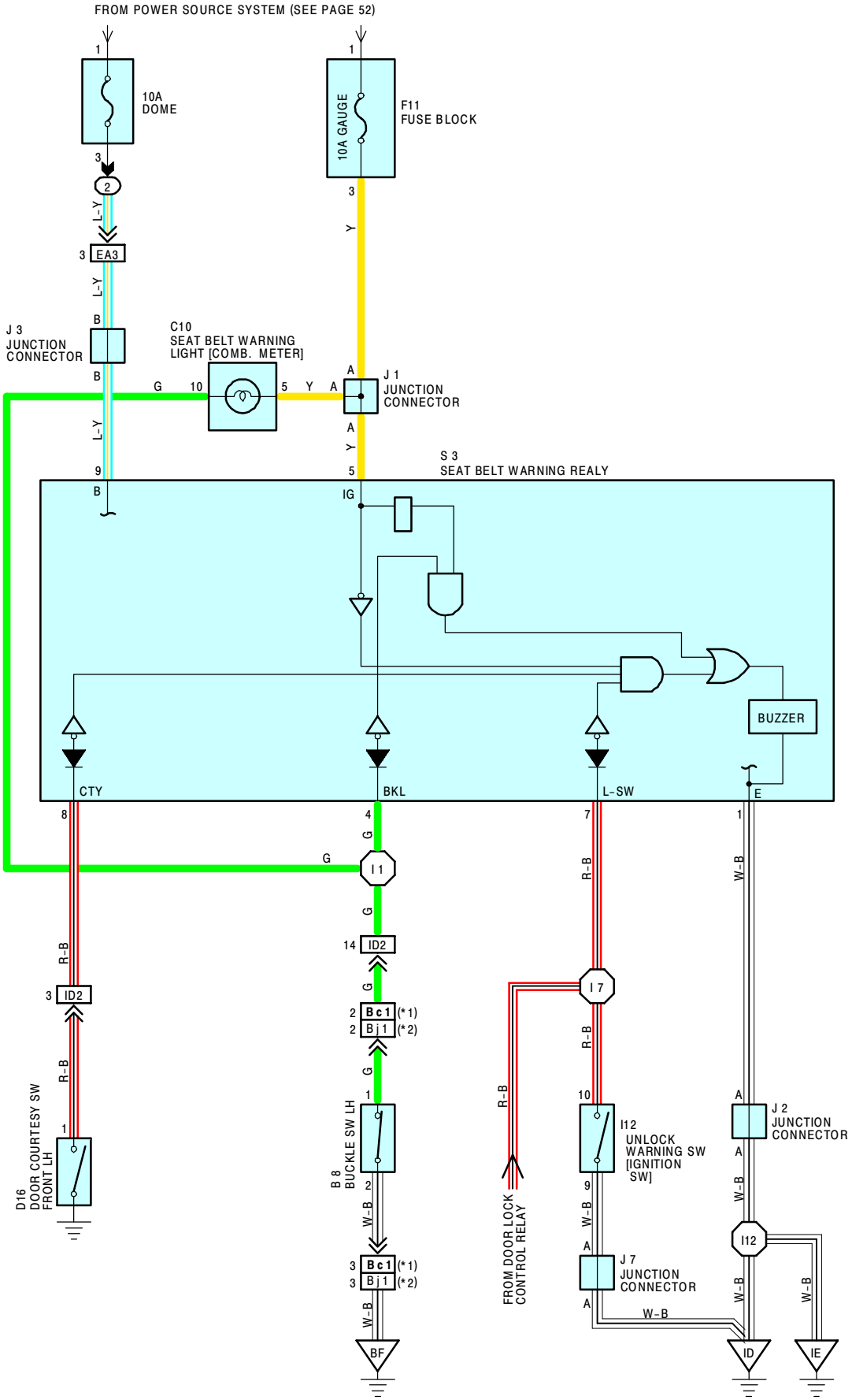

SYSTEM OUTLINE

WHEN THE IGNITION SW IS TURNED TO ON, THE CURRENT FLOWS FROM THE **GAUGE** FUSE, THROUGH **TERMINAL 5** OF THE SEAT BELT WARNING RELAY AND **TERMINAL 5** OF THE SEAT BELT WARNING LIGHT, TO **TERMINAL 1** OF THE BUCKLE SW LH. IF SEAT BELT IS NOT FASTENED AT THIS TIME (THE BUCKLE SW IS ON), THE CURRENT FLOWS FROM **TERMINAL 1** OF THE BUCKLE SW LH TO **TERMINAL 2** TO **GROUND**, LIGHTING UP THE SEAT BELT WARNING LIGHT. SIMULTANEOUSLY, A SIGNAL FROM THE BUCKLE SW LH IS INPUT TO **TERMINAL 4** OF THE SEAT BELT WARNING RELAY, AND THE CURRENT TO **TERMINAL 5** OF THE RELAY FLOWS THROUGH **TERMINAL 1** OF THE SEAT BELT WARNING RELAY TO **GROUND**, ACTIVATING THE SEAT BELT WARNING RELAY AND SOUNDING SEAT BELT WARNING BUZZER FOR **4** TO **8** SECONDS. IF THE SEAT BELT IS FASTENED (THE BUCKLE SW LH IS OFF) WHILE THE BUZZER SOUNDS, THE RELAY GROUND IS CUT, THE BUZZER STOP AND THE SEAT BELT WARNING LIGHT GOES OFF.

UNLOCK WARNING SYSTEM

WHEN THE IGNITION SW IS TURNED TO OFF AND THE DRIVER'S DOOR IS OPENED (THE DOOR COURTESY SW IS ON) WHILE THE KEY IS STILL INSERTED IN THE KEY CYLINDER (THE UNLOCK WARNING SW IS ON), A SIGNAL IS INPUT TO **TERMINAL 8** OF THE SEAT BELT WARNING RELAY, ACTIVATING THE SEAT BELT WARNING RELAY. THIS CAUSES CURRENT FROM THE **DOME** FUSE TO FLOW TO **TERMINAL 9** OF THE SEAT BELT WARNING RELAY → **TERMINAL 1** → **GROUND**, SOUNDING UNLOCK WARNING BUZZER.

SERVICE HINTS

B 8 BUCKLE SW LH
1-2 : OPEN WITH THE DRIVER'S SEAT BELT IN USE

D16 DOOR COURTESY SW FRONT LH
1-GROUND : CLOSED WITH THE DRIVER'S DOOR OPEN

S 3 SEAT BELT WARNING RELAY
1-GROUND : ALWAYS CONTINUITY
4-GROUND : CONTINUITY UNLESS DRIVER'S SEAT BELT IN USE
5-GROUND : APPROX. **12** VOLTS WITH THE IGNITION SW AT **ON** POSITION
7-GROUND : CONTINUITY WITH THE IGNITION KEY IN CYLINDER
8-GROUND : CONTINUITY WITH THE DRIVER'S DOOR OPEN
9-GROUND : ALWAYS APPROX. **12** VOLTS

I12 UNLOCK WARNING SW [IGNITION SW]
10-9 : CLOSED WITH THE IGNITION KEY IN CYLINDER

○ : PARTS LOCATION

CODE	SEE PAGE	CODE	SEE PAGE	CODE	SEE PAGE
B 8	26	**I12**	25	**J 7**	25
C10	24	**J 1**	25	**S 3**	25
D16	26	**J 2**	25		
F11	25	**J 3**	25		

⬭ : RELAY BLOCKS

CODE	SEE PAGE	RELAY BLOCKS (RELAY BLOCK LOCATION)
2	18	R/B NO. 2 (FRONT SIDE OF LEFT FENDER)

▭ : CONNECTOR JOINING WIRE HARNESS AND WIRE HARNESS

CODE	SEE PAGE	JOINING WIRE HARNESS AND WIRE HARNESS (CONNECTOR LOCATION)
EA3	30	COWL WIRE AND ENGINE ROOM MAIN WIRE (LEFT FENDER)
ID2	32	COWL WIRE AND FLOOR NO. 1 WIRE (LEFT KICK PANEL)
Bc1	38	FLOOR NO. 1 WIRE AND SEAT NO. 1 WIRE (UNDER THE DRIVER'S SEAT)
Bj1	38	FLOOR NO. 1 WIRE AND SEAT NO. 2 WIRE (UNDER THE DRIVER'S SEAT)

▽ : GROUND POINTS

CODE	SEE PAGE	GROUND POINTS LOCATION
ID	32	LEFT KICK PANEL
IE	32	RIGHT KICK PANEL
BF	34	UNDER THE CENTER CONSOLE BOX

⯃ : SPLICE POINTS

CODE	SEE PAGE	WIRE HARNESS WITH SPLICE POINTS	CODE	SEE PAGE	WIRE HARNESS WITH SPLICE POINTS
I 1	32	COWL WIRE	**I12**	32	COWL WIRE
I 7	32	COWL WIRE			

UNLOCK AND SEAT BELT WARNING

(W/O POWER SEAT) B 8 BLACK

(W/ POWER SEAT) B 8 BLACK

C10 GRAY

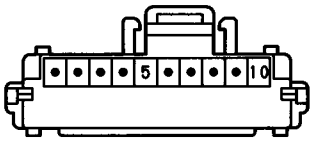

D16 BLUE

F11

(SEE PAGE 20)

I12 BLACK

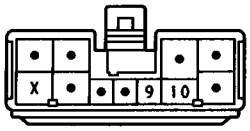

J 1

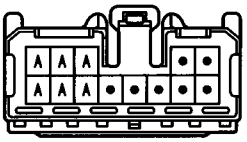

(HINT:SEE PAGE 7)

J 2 BLUE

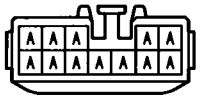

(HINT:SEE PAGE 7)

J 3

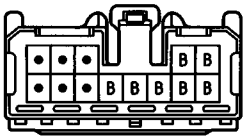

(HINT:SEE PAGE 7)

J 7 BLUE

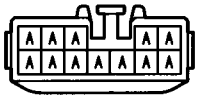

(HINT:SEE PAGE 7)

S 3 BLUE

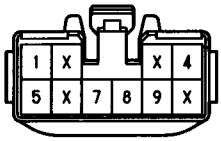

Brought to you by BirfMark

NOTICE: When inspecting or repairing the SRS, perform the operation in accordance with the following precautionary instructions and the procedure and precautions in the Repair Manual for the applicable model year.

- Malfunction symptoms of the supplemental restraint system are difficult to confirm, so the diagnostic trouble codes become the most important source of information when troubleshooting.

  When troubleshooting the supplemental restraint system, always inspect the diagnostic trouble codes before disconnecting the battery.

- Work must be started after 90 seconds from the time the Ignition SW is set to the “LOCK” position and the negative (-) terminal cable is disconnected from the battery.

  (The supplemental restraint system is equipped with a back-up power source so that if work is started within 90 seconds of disconnecting the negative (-) terminal cable of the battery, the SRS may be activated).

  When the negative (-) terminal cable is disconnected from the battery, memory of the clock and audio systems will be cancelled. So before starting work, make a record of the contents memorized by each memory system. When work is finished, reset the clock and audio system as before and adjust the clock.

  To avoid erasing the memory of each memory system, never use a back-up power supply from outside the vehicle.

- When removing the steering wheel pad or handling a new steering wheel pad, keep the pad upper surface facing upward. Also, lock the lock lever of the twin lock type connector at the rear of the pad and take care not to damage the connector.

  (Storing the pad with its metallic surface up may lead to a serious accident if the SRS inflates for some reason.)

- Always store a removed or new front passenger airbag assembly with the airbag door facing up. Storing the airbag assembly with the airbag door facing down could cause a serious accident if the airbag inflates.

- Store the steering wheel pad where the ambient temperature remains below 93°C (200°F), without high humidity and away from electrical noise.

- Never use SRS parts from another vehicle. When replacing SRS parts, replace them with new parts.

- Never disassemble and repair the steering wheel pad, front passenger airbag assembly airbag sensor assembly or front airbag sensors.

- Before repairing the body, remove the airbag sensors if during repair shocks are likely to be applied to the sensors due to vibration of the body or direct tapping with tools or other parts.

- Do not reuse a steering wheel pad or front airbag sensors.

  After evaluating whether the airbag sensor assembly is damaged or not, decide whether or not to reuse it. (See the Repair Manual for the method for evaluating the airbag sensor assembly.)

- When troubleshooting the supplemental restraint system, use a high-impedance (Min. 10KΩ/V) tester.

- The wire harness of the supplemental restraint system is integrated with the cowl wire harness assembly. The vehicle wiring harness exclusively for the airbag system is distinguished by corrugated yellow tubing, as are the connectors.

- Do not measure the resistance of the airbag squibs.

  (It is possible this will deploy the airbag and is very dangerous.)

- If the wire harness used in the supplemental restraint system is damaged, replace the whole wire harness assembly.

  When the connector to the front airbag sensors can be replaced alone (when there is no damage to the wire harness), use the repair wire specially designed for the purpose.

  (Refer to the Repair Manual for the applicable Model year for details of the replacement method.)

- INFORMATION LABELS (NOTICES) are attached to the periphery of the SRS components. Follow the instructions on the notices.

Brought to you by BirfMark

Brought to you by BirfMark

The supplemental restraint system has connectors which possess the functions described below:

1. SRS ACTIVATION PREVENTION MECHANISM

   Each connector contains a short spring plate. When the connector is disconnected, the short spring plate automatically connects the power source and grounding terminals of the squib to preclude a potential difference between the terminals.

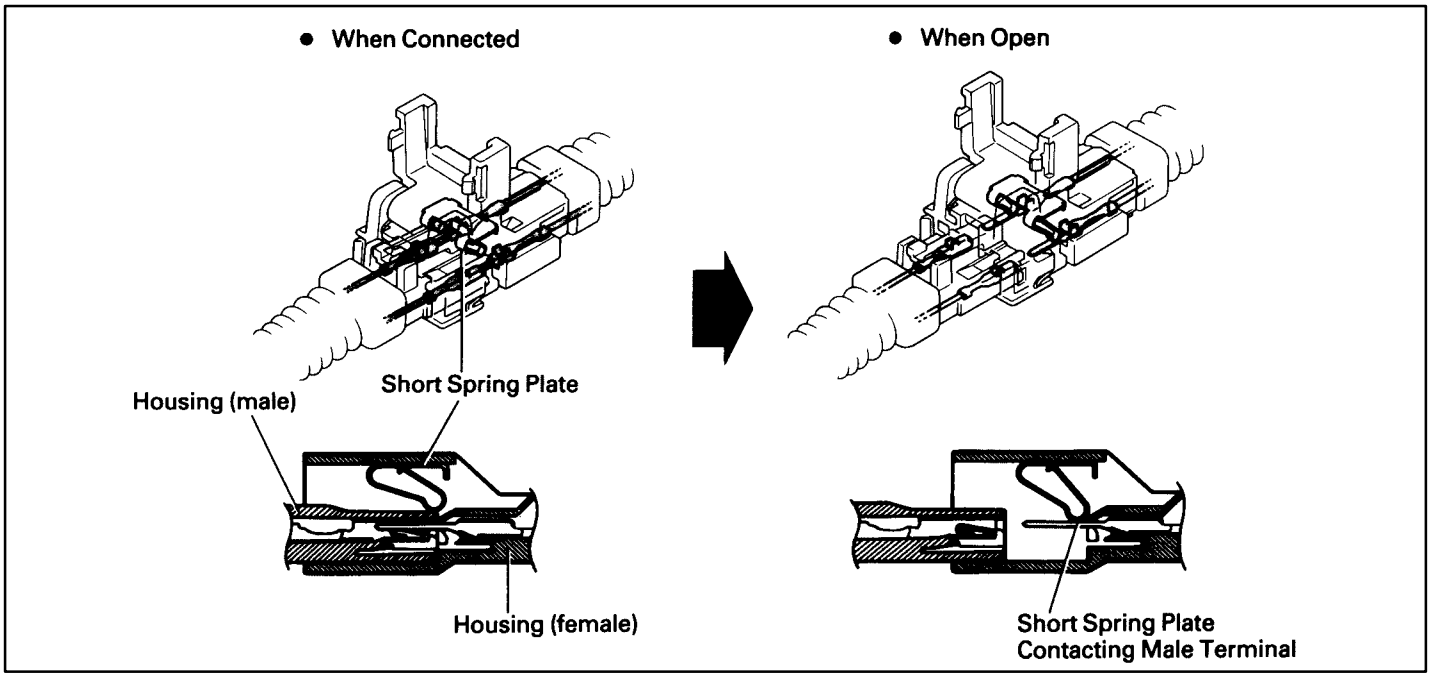

2. ELECTRICAL CONNECTION CHECK MECHANISM

   This mechanism is designed to electrically check if connectors are connected properly and completely.

   The electrical connection check mechanism is designed so that the connection detection pin connects with the diagnosis terminals when the connector housing lock is in the locked condition.

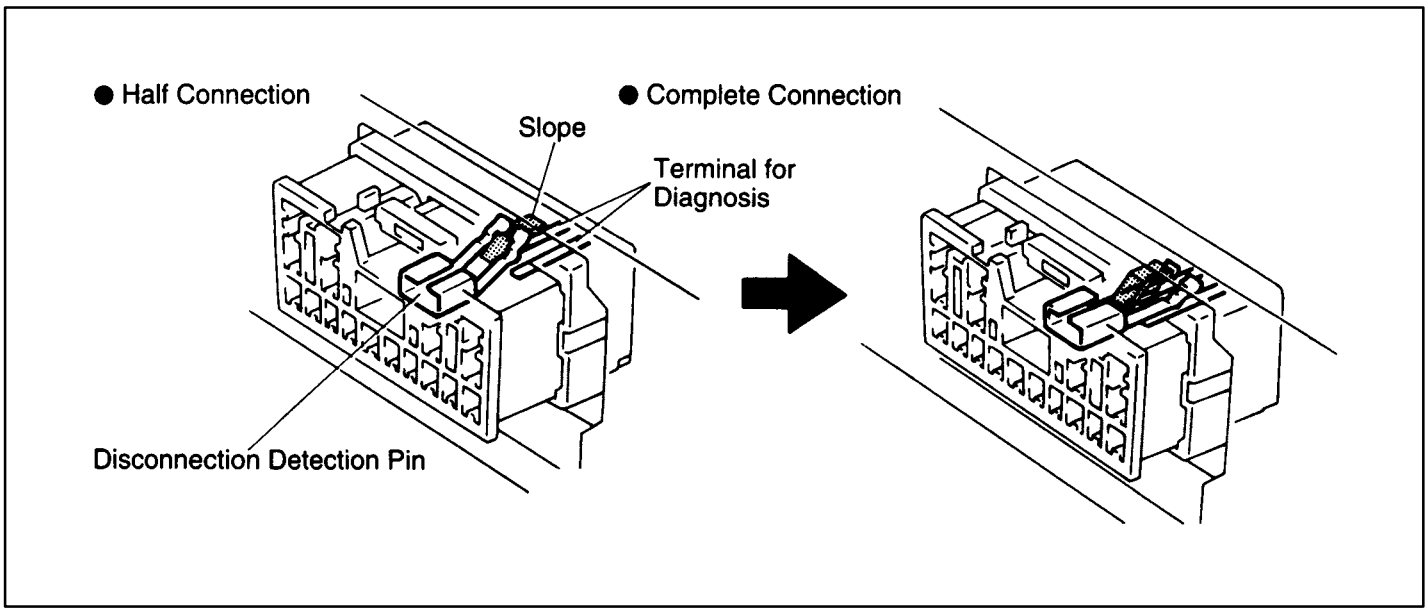

Brought to you by BirfMark

Brought to you by BirfMark

3. CONNECTOR TWIN-LOCK MECHANISM

With this mechanism connectors (male and female connectors) are locked by two locking devices to increase connection reliability. If the primary lock is incomplete, ribs interfere and prevent the secondary lock.

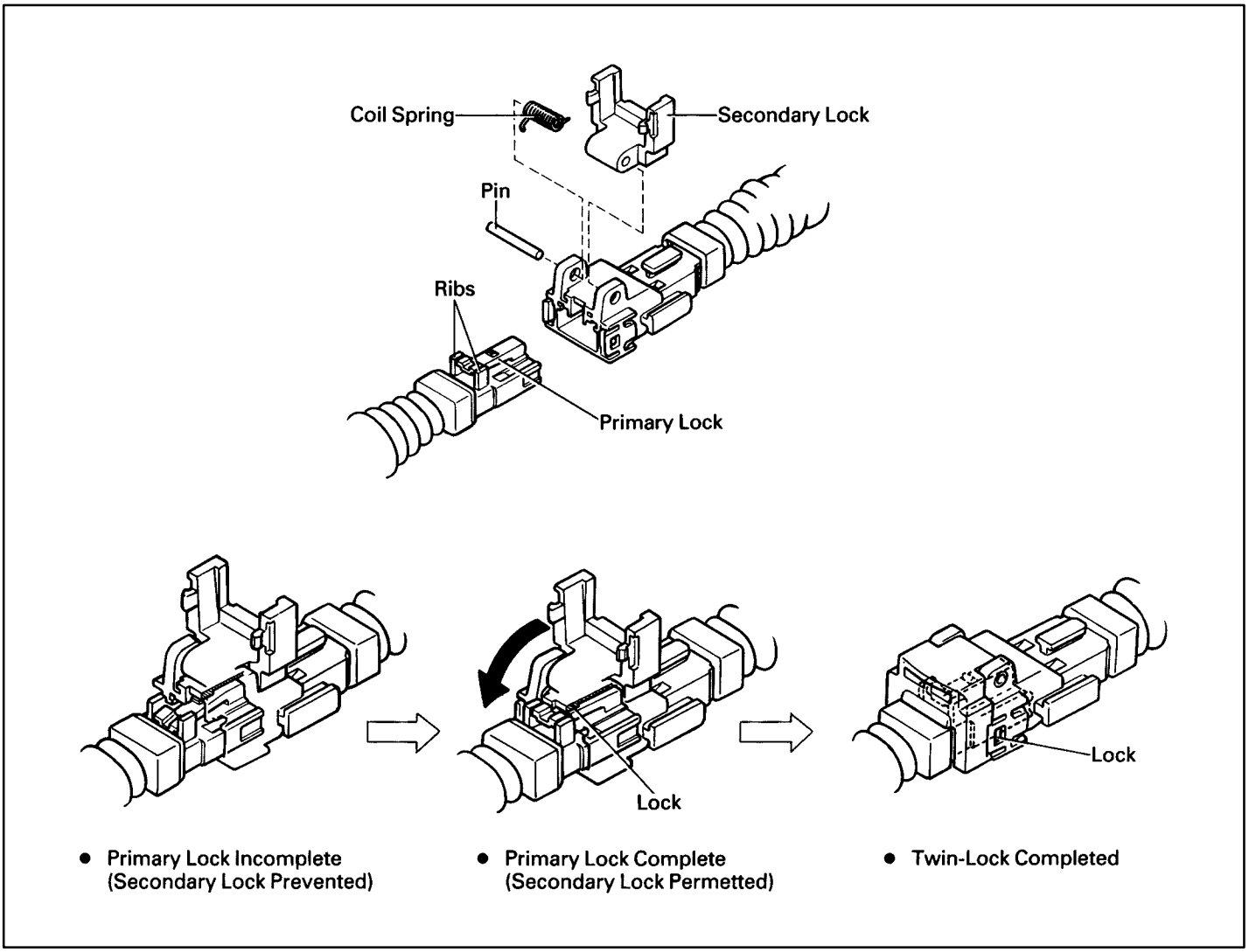

Brought to you by BirfMark

SRS

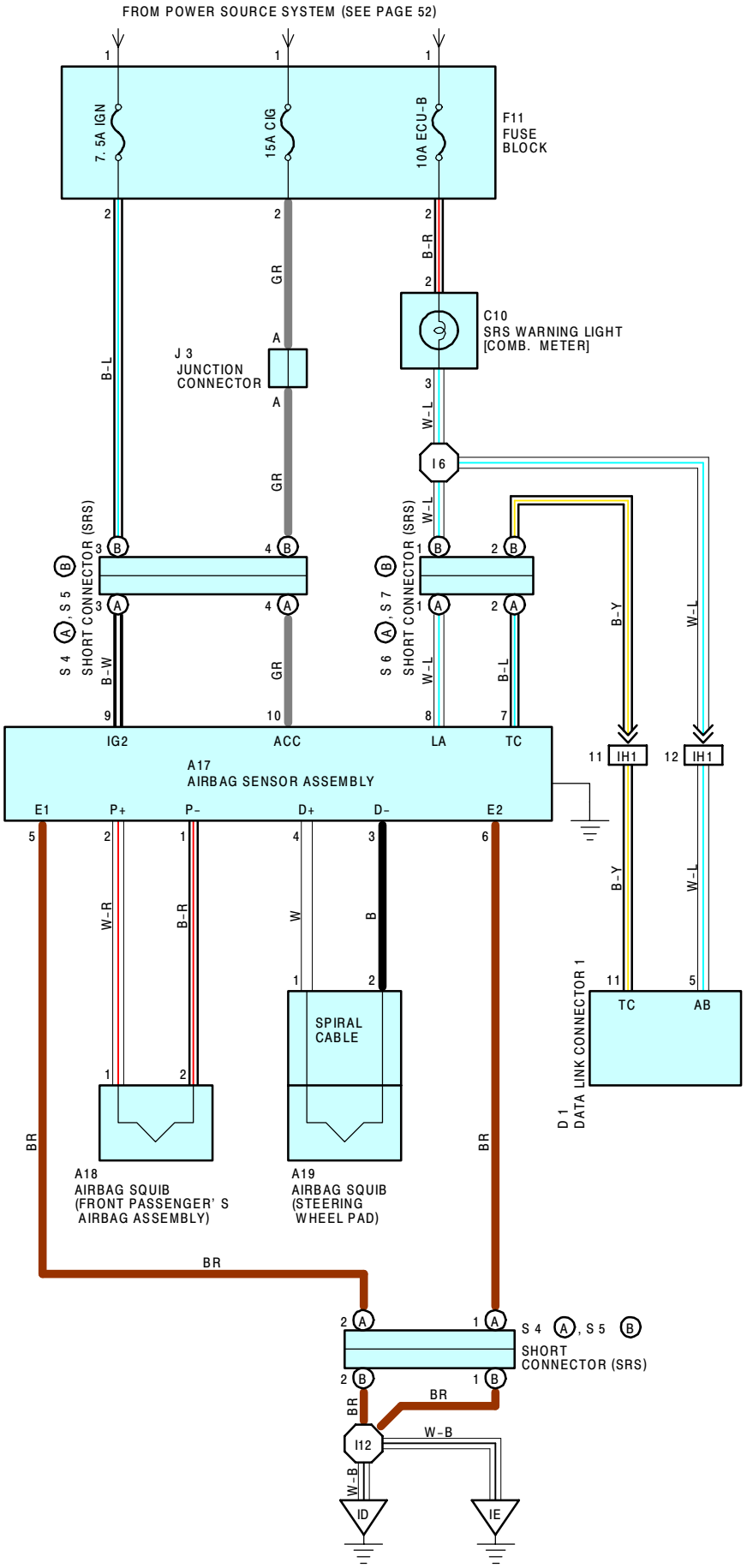
FROM POWER SOURCE SYSTEM (SEE PAGE 52)
7. 5A IGN
15A CIG
10A ECU-B
F11
FUSE
BLOCK
B-L
GR
B-R
J 3
JUNCTION
CONNECTOR
C10
SRS WARNING LIGHT
[COMB. METER]
W-L
I6
S 4 , S 5
SHORT CONNECTOR (SRS)
S 6 , S 7
SHORT CONNECTOR (SRS)
B-W
B-Y
IG2
ACC
LA
TC
IH1
A17
AIRBAG SENSOR ASSEMBLY
E1
P+
P-
D+
D-
E2
W-R
W
B
SPIRAL
CABLE
BR
A18
AIRBAG SQUIB
(FRONT PASSENGER' S
AIRBAG ASSEMBLY)
A19
AIRBAG SQUIB
(STEERING
WHEEL PAD)
D 1
DATA LINK CONNECTOR 1
AB
S 4 , S 5
SHORT
CONNECTOR (SRS)
I12
W-B
ID
IE

SYSTEM OUTLINE

THE SRS IS A DRIVER AND PASSENGER PROTECTION DEVICE WHICH HAS A SUPPLEMENTAL ROLE TO THE SEAT BELTS.

WHEN THE IGNITION SW IS TURNED TO ACC OR ON. THE CURRENT FROM THE **CIG** FUSE FLOWS TO **TERMINAL 10** OF THE AIRBAG SENSOR ASSEMBLY. ONLY WHEN THE IGNITION SW IS ON DOES THE CURRENT FROM THE **IGN** FUSE FLOWS TO **TERMINAL 9** OF THE ASSEMBLY.

IF AN ACCIDENT OCCURS WHILE DRIVING, DECELERATION CAUSED BY A FRONTAL IMPACT IS DETECTED BY THE SENSOR IN THE AIRBAG SENSOR ASSEMBLY, AND WHEN THE FRONTAL IMPACT EXCEEDS A SET LEVEL (WHEN THE SAFING SENSOR BUILT INTO THE AIRBAG SENSOR ASSEMBLY IS ON, THE FLOOR SENSOR BUILT INTO THE AIRBAG SENSOR ASSEMBLY IS ON AND THE AIRBAG SENSOR ASSEMBLY IS ON), THE CURRENT FROM THE **CIG** OR THE **IGN** FUSE FLOWS THROUGH THE AIRBAG SENSOR ASSEMBLY TO **TERMINALS 4** AND **2** OF THE AIRBAG SENSOR ASSEMBLY TO **TERMINAL 1** OF THE AIRBAG SQUIB → **TERMINAL 2** → **TERMINALS 3** AND **1** OF THE AIRBAG SENSOR ASSEMBLY → THE FLOOR SENSOR BUILT INTO THE AIRBAG SENSOR ASSEMBLY → **TERMINAL 5, TERMINAL 6** OR **BODY GROUND** → **GROUND**.

WHEN THE SAFING SENSOR BUILT INTO THE AIRBAG SENSOR ASSEMBLY IS ON, AND FLOOR SENSOR BUILT INTO THE AIRBAG SENSOR ASSEMBLY IS ON, ONE OF THE ABOVE-MENTIONED CIRCUITS IS ACTIVATED SO THAT THE CURRENT FLOWS TO THE AIRBAG SQUIBS, CAUSING IT TO OPERATE.

THE AIRBAG STORED INSIDE THE STEERING WHEEL PAD IS INSTANTANEOUSLY EXPANDED TO SOFTEN THE SHOCK TO A DRIVER.

SIMULTANEOUSLY, THE AIRBAG STORED INSIDE THE PASSENGER'S INSTRUMENT PANEL IS INSTANTANEOUSLY EXPANDED TO SOFTEN THE SHOCK TO A PASSENGER.

○ : PARTS LOCATION

CODE	SEE PAGE	CODE	SEE PAGE	CODE		SEE PAGE
A17	24	**D 1**	22	**S 5**	B	25
A18	24	**F11**	25	**S 6**	A	25
A19	24	**J 3**	25	**S 7**	B	25
C10	24	**S 4** A	25			

▭ : CONNECTOR JOINING WIRE HARNESS AND WIRE HARNESS

CODE	SEE PAGE	JOINING WIRE HARNESS AND WIRE HARNESS (CONNECTOR LOCATION)
IH1	32	ENGINE WIRE AND COWL WIRE (BEHIND GLOVE BOX)

▽ : GROUND POINTS

CODE	SEE PAGE	GROUND POINTS LOCATION
ID	32	LEFT KICK PANEL
IE	32	RIGHT KICK PANEL

⯃ : SPLICE POINTS

CODE	SEE PAGE	WIRE HARNESS WITH SPLICE POINTS	CODE	SEE PAGE	WIRE HARNESS WITH SPLICE POINTS
I 6	32	COWL WIRE			

A17 YELLOW

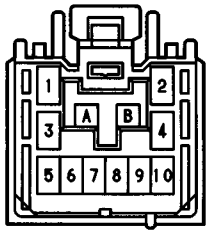

A18 YELLOW

A19 YELLOW

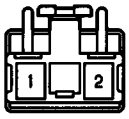

C10 GRAY

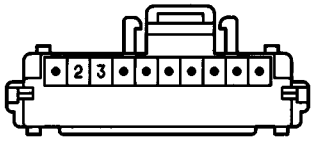

D 1 BLACK

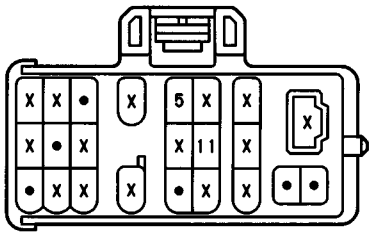

F11

(SEE PAGE 20)

J 3

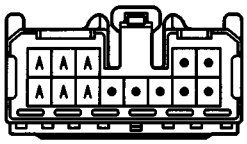

(HINT:SEE PAGE 7)

S 4 (A) YELLOW

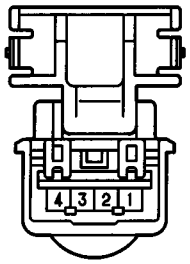

S 5 (B) YELLOW

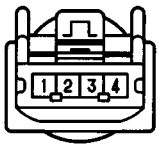

S 6 (A) YELLOW

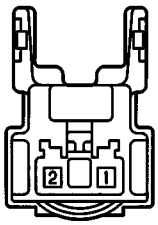

S 7 (B) YELLOW

MEMO

Brought to you by BirfMark

CENTER DIFFERENTIAL LOCK

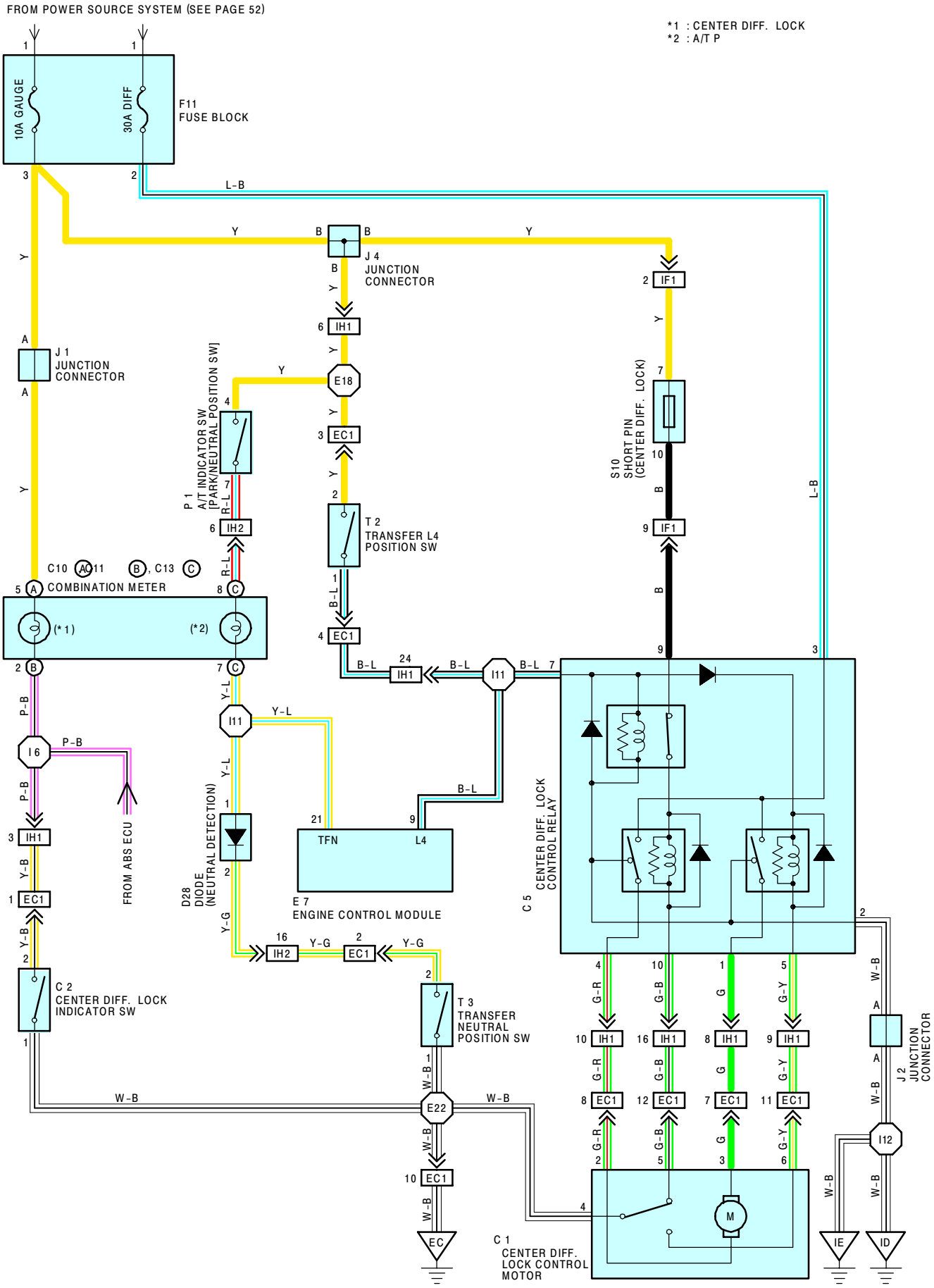

SERVICE HINTS

C5 CENTER DIFF. LOCK CONTROL RELAY

3-GROUND : APPROX. **12** VOLTS WITH THE IGNITION SW AT **ON** POSITION
2-GROUND : ALWAYS CONTINUITY
7-GROUND : APPROX. **12** VOLTS WITH THE IGNITION SW AT **ON** POSITION AND FOUR-WHEEL DRIVE CONTROL LEVER AT **L4** POSITION

○ : PARTS LOCATION

CODE		SEE PAGE	CODE	SEE PAGE	CODE	SEE PAGE
C 1		22	**D28**	24	**P 1**	23
C 2		22	**E 7**	24	**S10**	25
C 5		24	**F11**	25	**T 2**	23
C10	A	24	**J 1**	25	**T 3**	23
C11	B	24	**J 2**	25		
C13	C	24	**J 4**	25		

▭ : CONNECTOR JOINING WIRE HARNESS AND WIRE HARNESS

CODE	SEE PAGE	JOINING WIRE HARNESS AND WIRE HARNESS (CONNECTOR LOCATION)
EC1	30	ENGINE WIRE AND TRANSMISSION WIRE (NEAR THE STARTER)
IF1	32	COWL WIRE AND INSTRUMENT PANEL WIRE (INSTRUMENT PANEL CENTER)
IH1	32	ENGINE WIRE AND COWL WIRE (BEHIND GLOVE BOX)
IH2		

▽ : GROUND POINTS

CODE	SEE PAGE	GROUND POINTS LOCATION
EC	30	AIR INTAKE CHAMBER
ID	32	LEFT KICK PANEL
IE	32	RIGHT KICK PANEL

⬡ : SPLICE POINTS

CODE	SEE PAGE	WIRE HARNESS WITH SPLICE POINTS	CODE	SEE PAGE	WIRE HARNESS WITH SPLICE POINTS
E18	30	ENGINE WIRE	**I11**	32	COWL WIRE
E22	30	TRANSMISSION WIRE	**I12**		
I 6	32	COWL WIRE			

C 1

C 2 GRAY

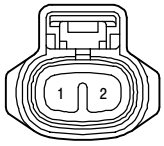

C 5

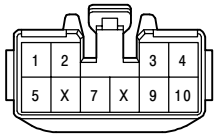

C10 (A) GRAY

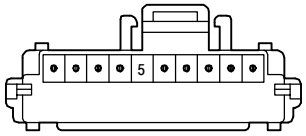

C11 (B) BLUE

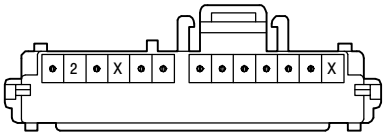

C13 (C)

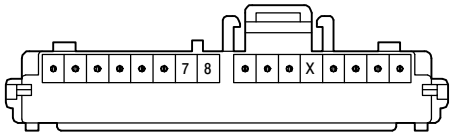

E 7 DARK GRAY

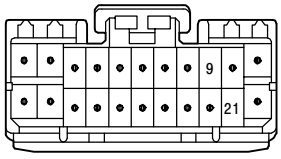

F11

(SEE PAGE 20)

J 1

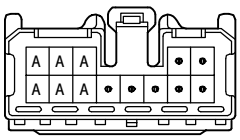

(HINT : SEE PAGE 7)

J 2 BLUE

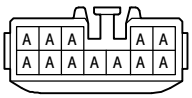

(HINT : SEE PAGE 7)

J 4

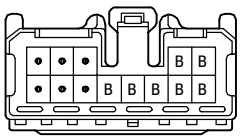

(HINT : SEE PAGE 7)

P 1 GRAY

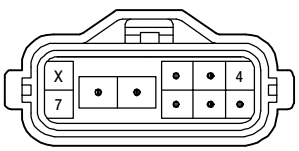

S10

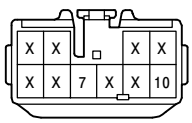

T 2 GRAY

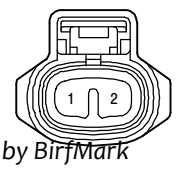

T 3 GRAY

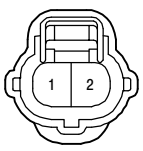

Brought to you by BirfMark

FRONT/REAR DIFFERENTIAL LOCK

FROM POWER SOURCE SYSTEM (SEE PAGE 52)

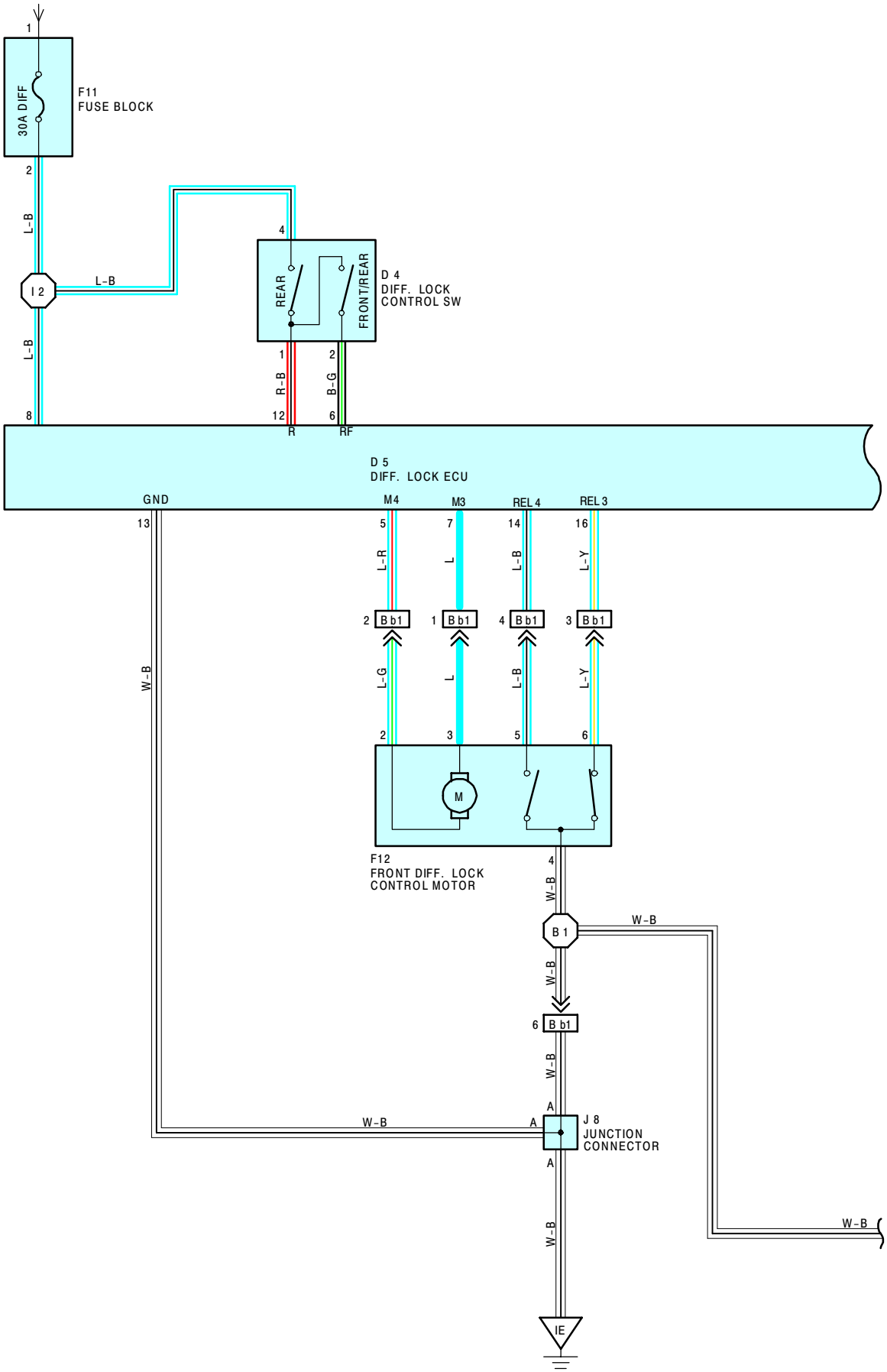

Brought to you by BirfMark

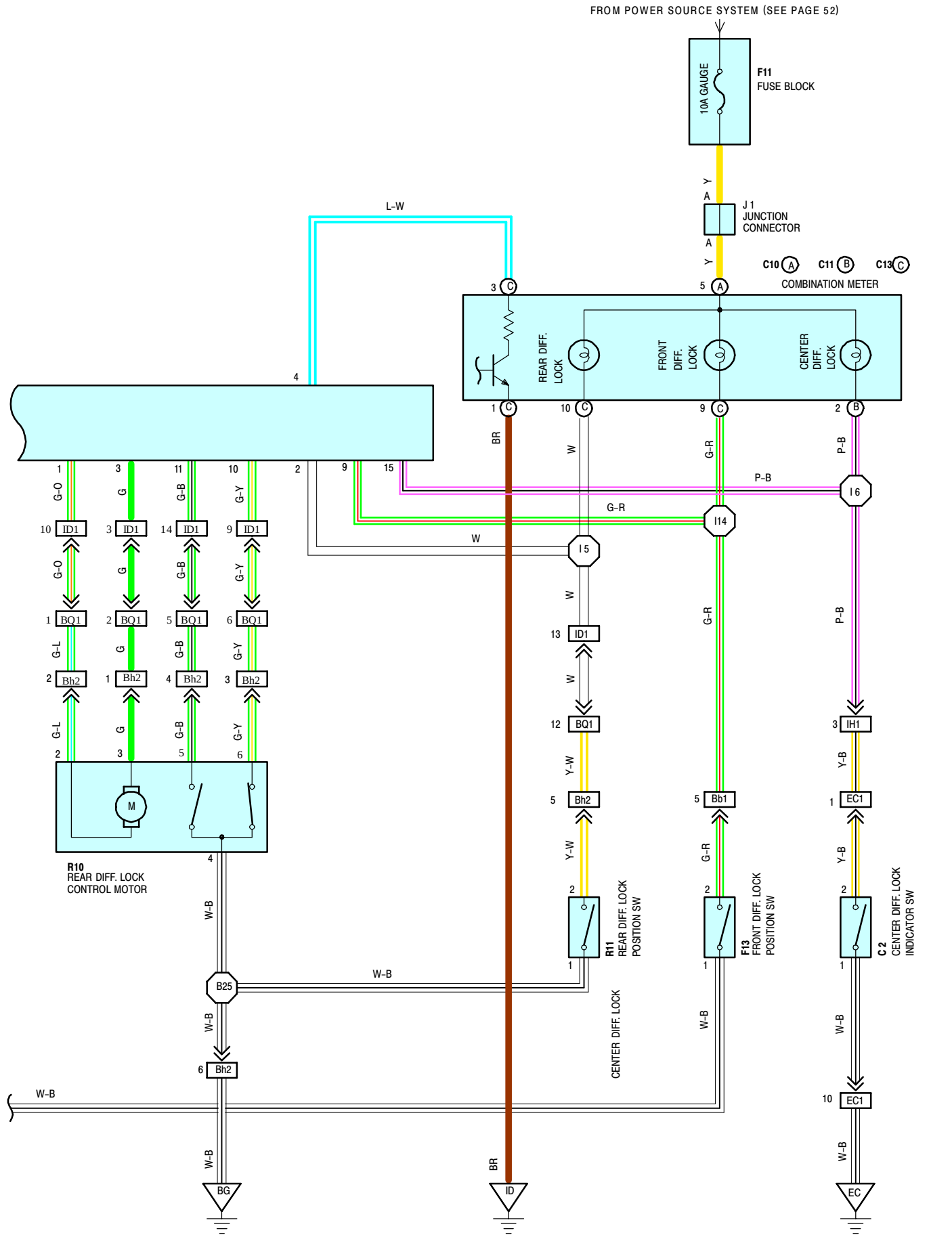
FROM POWER SOURCE SYSTEM (SEE PAGE 52)
10A GAUGE
F11
FUSE BLOCK
J 1
JUNCTION
CONNECTOR
C10 A
C11 B
C13 C
COMBINATION METER
REAR DIFF.
LOCK
FRONT
DIFF.
LOCK
CENTER
DIFF.
LOCK
L-W
BR
W
G-R
P-B
I 6
I14
I 5
G-O
G
G-B
G-Y
G-L
W-B
Y-W
Y-B
ID1
BQ1
Bh2
Bb1
IH1
EC1
M
R10
REAR DIFF. LOCK
CONTROL MOTOR
B25
R11
REAR DIFF. LOCK
POSITION SW
CENTER DIFF. LOCK
F13
FRONT DIFF. LOCK
POSITION SW
C 2
CENTER DIFF. LOCK
INDICATOR SW
BG
ID
EC

FRONT/REAR DIFFERENTIAL LOCK

SYSTEM OUTLINE

THIS SYSTEM FREES OR LOCKS THE FRONT AND REAR DIFFERENTIALS ACCORDING TO THE POSITION OF THE DIFF. LOCK CONTROL SW. THE DIFFERENTIAL WILL LOCK ONLY WHEN THE CENTER DIFF. LOCK INDICATOR SW IS ON AND THE VEHICLE SPEED IS AT **8** KM/H (**5** MPH) OR LESS.

WHEN THE CENTER DIFF. LOCK INDICATOR SW IS OFF, DIFFERENTIAL LOCK DOES NOT OCCUR EVEN IF THE DIFF. LOCK CONTROL SW IS IN **RR** POSITION OR **FR•RR** POSITION.

WHEN THE DIFF. LOCK CONTROL SW IS SWITCHED FROM **OFF** POSITION TO **RR** POSITION, THE CURRENT FLOW TO **TERMINAL 12** OF THE DIFF. LOCK ECU. IF THE LIMIT SW ON THE LOCK SIDE INSIDE THE REAR DIFF. LOCK CONTROL MOTOR IS ON AT THIS TIME, UNTIL THE LIMIT SW IS TURNED OFF, THE CURRENT FLOWS FROM THE **DIFF** FUSE TO **TERMINAL 8** OF THE DIFF. LOCK ECU → **TERMINAL 3** → **TERMINAL 3** OF THE REAR DIFF. LOCK CONTROL MOTOR → **TERMINAL 2** → **TERMINAL 1** OF THE DIFF. LOCK ECU → **TERMINAL 13** → **GROUND.** THIS DRIVES THE REAR DIFF. LOCK CONTROL MOTOR AND LOCKS THE REAR DIFFERENTIAL. WHEN THE REAR DIFFERENTIAL LOCKS, THE REAR DIFF. LOCK POSITION SW TURNS ON, LIGHTING UP THE REAR DIFF. LOCK INDICATOR LIGHT IN THE COMBINATION METER.

WHEN THE DIFF. LOCK CONTROL SW IS SWITCHED FROM **RR** POSITION TO **FR•RR** POSITION, THE CURRENT FLOWS TO **TERMINAL 6** OF THE DIFF. LOCK ECU. IF THE LIMIT SW ON THE LOCK SIDE INSIDE THE FRONT DIFF. LOCK CONTROL MOTOR IS ON AT THIS TIME, UNTIL THE LIMIT SW IS TURNED OFF, THE CURRENT FLOWS FROM THE **DIFF** FUSE TO **TERMINAL 8** OF THE DIFF. LOCK ECU → **TERMINAL 7** → **TERMINAL 3** OF THE FRONT DIFF. LOCK CONTROL MOTOR → **TERMINAL 2** → **TERMINAL 5** OF THE DIFF. LOCK ECU → **TERMINAL 13** → **GROUND**. THIS DRIVES THE FRONT DIFF. LOCK CONTROL MOTOR AND LOCKS THE FRONT DIFFERENTIAL. WHEN THE FRONT DIFFERENTIAL LOCKS, THE FRONT DIFF. LOCK POSITION SW TURNS ON, LIGHTING UP THE FRONT DIFF. LOCK INDICATOR LIGHT IN THE COMBINATION METER.

WHEN THE DIFF. LOCK CONTROL SW IS SWITCHED FROM **FR•RR** POSITION TO **RR** POSITION, THE CURRENT TO **TERMINAL 6** OF THE DIFF. LOCK ECU IS CUT OFF. IF THE LIMIT SW ON THE FREE SIDE INSIDE THE FRONT DIFF. LOCK CONTROL MOTOR IS ON AT THIS TIME, UNTIL THE LIMIT SW IS TURNED OFF, THE CURRENT FLOWS FROM THE **DIFF** FUSE TO **TERMINAL 8** OF THE DIFF. LOCK ECU → **TERMINAL 5** → **TERMINAL 2** OF THE FRONT DIFF. LOCK CONTROL MOTOR → **TERMINAL 3** → **TERMINAL 7** OF THE DIFF. LOCK ECU → **TERMINAL 13** → **GROUND**. THIS DRIVES THE FRONT DIFF. LOCK CONTROL MOTOR AND FREE THE FRONT DIFFERENTIAL. THIS CAUSES THE FRONT DIFF. **LOCK** POSITION **SW** AND THE FRONT DIFF. LOCK INDICATOR LIGHT INSIDE THE COMBINATION METER TO TURN OFF.

WHEN THE DIFF. LOCK CONTROL SW IS SWITCHED FROM **RR** POSITION TO **OFF** POSITION, CURRENT TO **TERMINAL 12** OF THE DIFF. LOCK ECU IS CUT OFF. IF THE LIMIT SW ON THE FREE SIDE INSIDE THE REAR DIFF. LOCK CONTROL MOTOR IS ON, UNTIL THE LIMIT SW IS TURNED OFF, THE CURRENT FLOW FROM THE **DIFF** FUSE TO **TERMINAL 8** OF THE DIFF. LOCK ECU → **TERMINAL 1** → **TERMINAL 2** OF THE REAR DIFF. LOCK CONTROL MOTOR → **TERMINAL 3** → **TERMINAL 3** OF THE DIFF. LOCK ECU → **TERMINAL 13** → **GROUND**. THIS DRIVES THE REAR DIFF. LOCK CONTROL MOTOR AND FREES THE REAR DIFFERENTIAL. WHEN THE REAR DIFFERENTIAL IS FREE, THE REAR DIFF. **LOCK** POSITION SW AND THE REAR DIFF. LOCK INDICATOR LIGHT IN THE COMBINATION METER ARE TURNED OFF.

THE DIFF. LOCK INDICATOR LIGHT FLASHES WHEN:

* THE DIFF. LOCK CONTROL SW IS SWITCHED TO **RR** POSITION OR **FR•RR** POSITION DURING DIFFERENTIAL LOCK PROHIBITION CONDITIONS (VEHICLE SPEED ABOVE **8** KM/H (**5** MPH) OR CENTER DIFF. LOCK INDICATOR SW OFF).
* THE DIFF. **LOCK** POSITION SW IS TURNED OFF DURING OPERATION OF THE DIFF. LOCK CONTROL MOTOR.

SERVICE HINTS

D 4 DIFF. LOCK CONTROL SW

4-1 : CLOSED WITH THE DIFF. LOCK CONTROL SW AT **"RR"** POSITION OR **"FR•RR"** POSITION
4-2 : CLOSED WITH THE DIFF. LOCK SW AT **"FR•RR"** POSITION

D 5 DIFF. LOCK ECU

(DISCONNECTED WIRING CONNECTOR FROM ECU)
13-GROUND : ALWAYS CONTINUITY
4-GROUND : PULSE GENERATION WITH VEHICLE MOVING
8-GROUND : **9-14** VOLTS WITH THE IGNITION SW ON
2-GROUND : ABOUT **0** VOLTS WITH THE REAR DIFF. LOCK INDICATOR LIGHT ON
: **9-14** VOLTS WITH THE REAR DIFF. LOCK INDICATOR LIGHT OFF
9-GROUND : ABOUT **0** VOLTS WITH THE FRONT DIFF. LOCK INDICATOR LIGHT ON
: **9-14** VOLTS WITH THE FRONT DIFF. LOCK INDICATOR LIGHT OFF
15-GROUND : ABOUT **0** VOLTS WITH THE CENTER DIFF. LOCK INDICATOR LIGHT ON
: **9-14** VOLTS WITH THE CENTER DIFF. LOCK INDICATOR LIGHT OFF

F12, R10 FRONT, REAR DIFF. LOCK CONTROL MOTOR

2-3 : **0.3-100** Ω

○ : PARTS LOCATION

CODE		SEE PAGE	CODE	SEE PAGE	CODE	SEE PAGE
C 2		22	**D 5**	24	**J 8**	25
C10	A	24	**F11**	25	**R10**	27
C11	B	24	**F12**	26	**R11**	27
C13	C	24	**F13**	26		
D 4		24	**J 1**	25		

▭ : CONNECTOR JOINING WIRE HARNESS AND WIRE HARNESS

CODE	SEE PAGE	JOINING WIRE HARNESS AND WIRE HARNESS (CONNECTOR LOCATION)
EC1	30	ENGINE WIRE AND TRANSMISSION WIRE (NEAR THE STARTER)
ID1	32	COWL WIRE AND FLOOR NO. 1 WIRE (LEFT KICK PANEL)
IH1	32	ENGINE WIRE AND COWL WIRE (BEHIND GLOVE BOX)
BQ1	34	FLOOR NO. 3 WIRE AND FLOOR NO. 1 WIRE (LEFT QUARTER PANEL INNER)
Bb1	36	COWL WIRE AND FRAME WIRE (RIGHT FENDER)
Bh2	36	FLOOR NO. 3 WIRE AND FRAME NO. 2 WIRE (LEFT QUARTER PANEL INNER)

▽ : GROUND POINTS

CODE	SEE PAGE	GROUND POINTS LOCATION
EC	30	AIR INTAKE CHAMBER
ID	32	LEFT KICK PANEL
IE	32	RIGHT KICK PANEL
BG	34	LOWER BACK PANEL CENTER

⬡ : SPLICE POINTS

CODE	SEE PAGE	WIRE HARNESS WITH SPLICE POINTS	CODE	SEE PAGE	WIRE HARNESS WITH SPLICE POINTS
I 2			**I14**	32	COWL WIRE
I 5	32	COWL WIRE	**B 1**	36	FRAME WIRE
I 6			**B25**	36	FLAME NO. 2 WIRE

C 2, F13, R11 GRAY

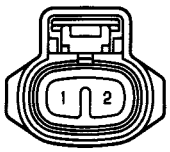

C10 (A) GRAY

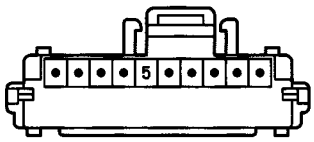

C11 (B) BLUE

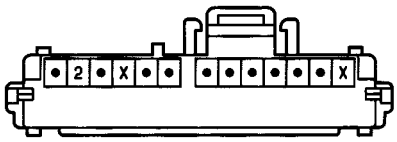

C13 (C)

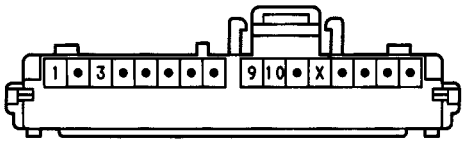

D 4

D 5 GRAY

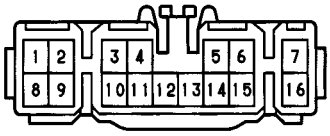

F11

(SEE PAGE 20)

F12, R10

J 1

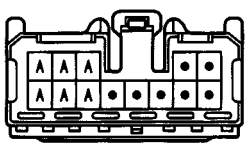

(HINT:SEE PAGE 7)

J 8 BLUE

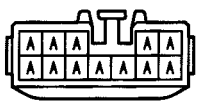

(HINT:SEE PAGE 7)

RADIO AND PLAYER

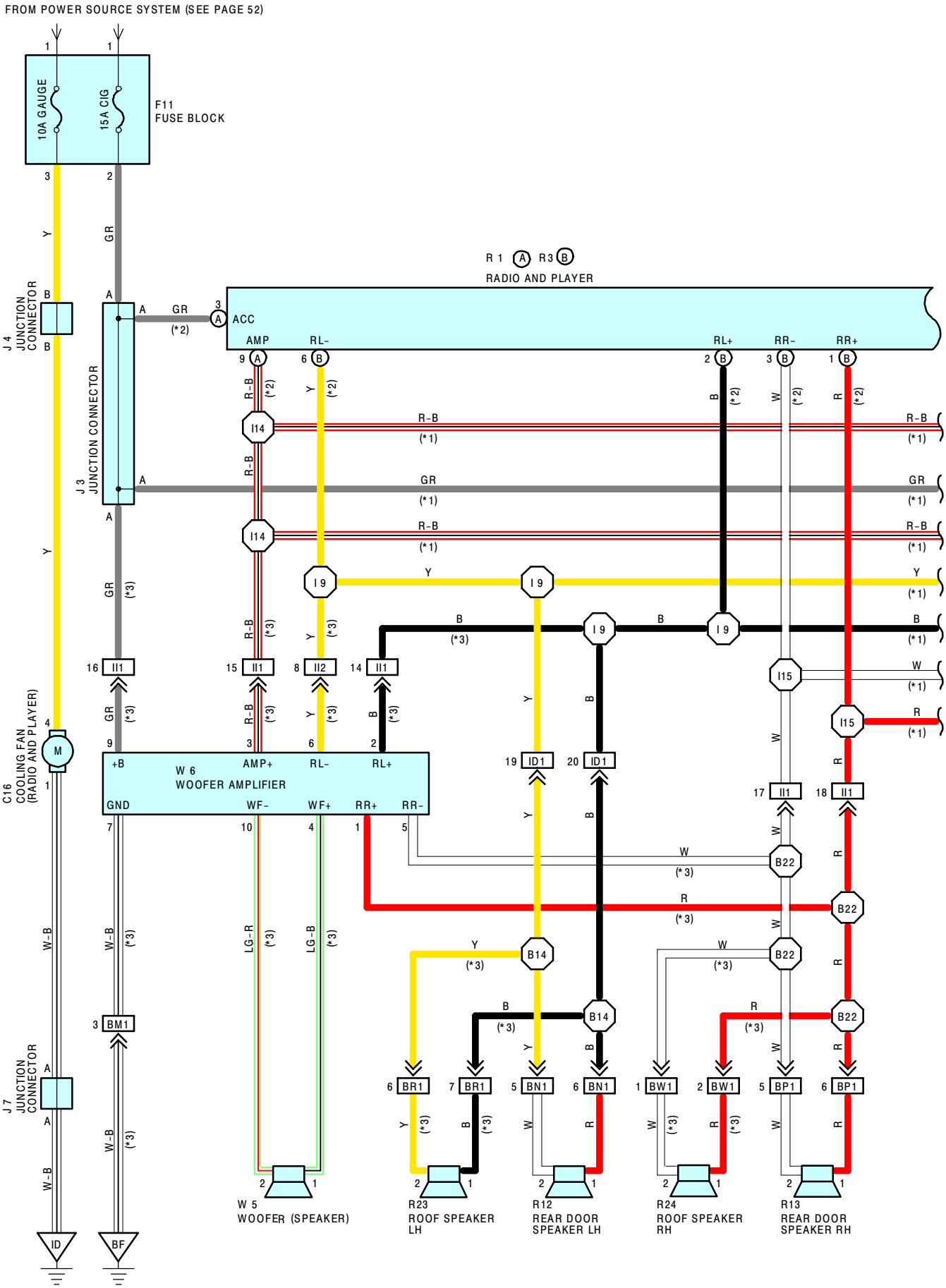

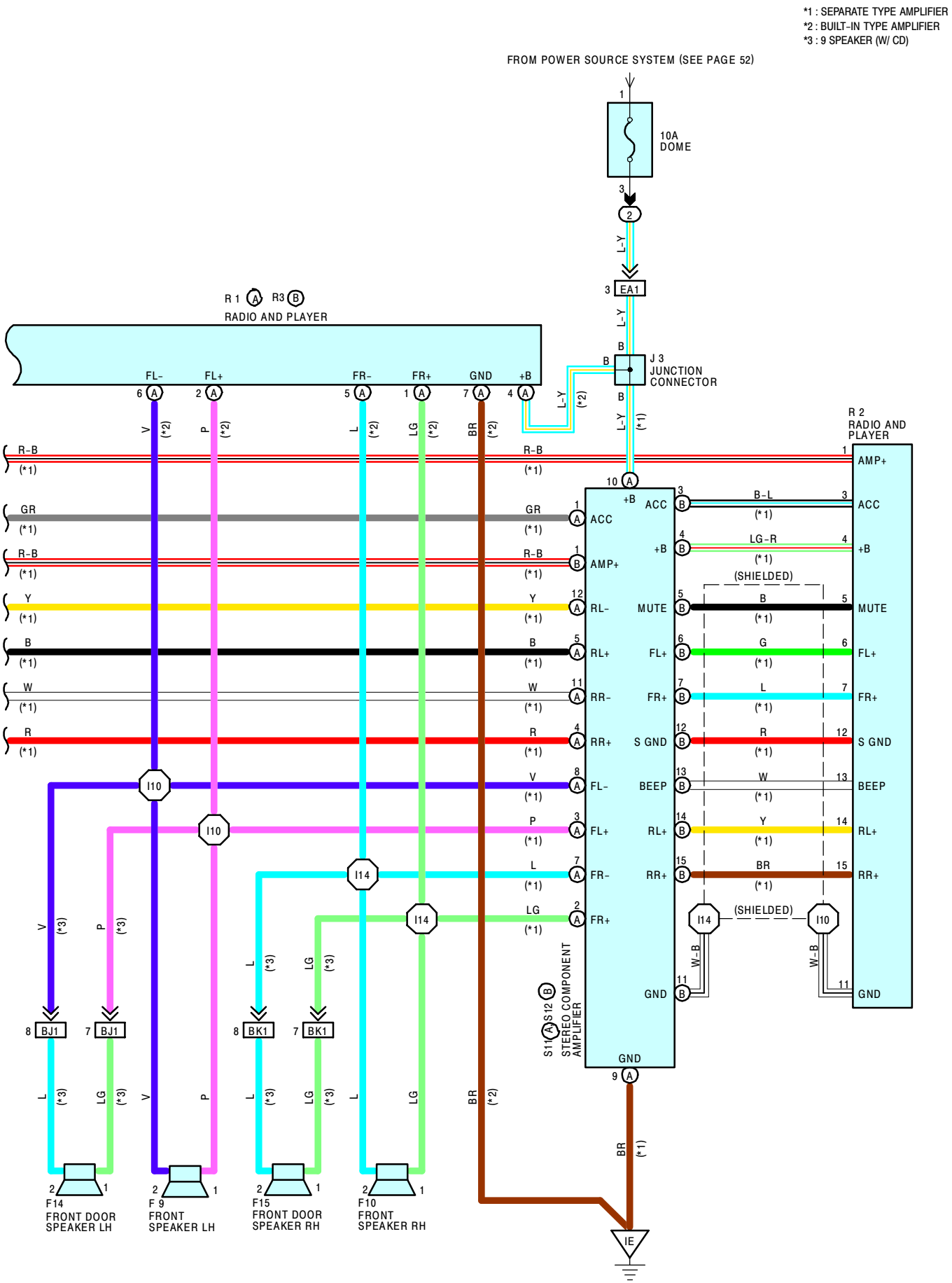
*1 : SEPARATE TYPE AMPLIFIER
*2 : BUILT-IN TYPE AMPLIFIER
*3 : 9 SPEAKER (W/ CD)
FROM POWER SOURCE SYSTEM (SEE PAGE 52)
10A DOME
EA1
J 3 JUNCTION CONNECTOR
R 1 R3
RADIO AND PLAYER
R 2 RADIO AND PLAYER
FL- FL+ FR- FR+ GND +B
AMP+ ACC +B MUTE FL+ FR+ S GND BEEP RL+ RR+ GND
ACC +B AMP+ RL- RL+ RR- RR+ FL- FL+ FR- FR+ GND
(SHIELDED)
I10 I14
BJ1 BK1
STEREO COMPONENT AMPLIFIER
F14 FRONT DOOR SPEAKER LH
F 9 FRONT SPEAKER LH
F15 FRONT DOOR SPEAKER RH
F10 FRONT SPEAKER RH
IE

RADIO AND PLAYER

SERVICE HINTS

R 1 (A) RADIO AND PLAYER
- **(A)** 4-GROUND : ALWAYS APPROX. **12** VOLTS
- **(A)** 3-GROUND : APPROX. **12** VOLTS WITH THE IGNITION SW AT **ACC** OR **ON** POSITION
- **(A)** 7-GROUND : ALWAYS CONTINUITY

S11 (A) STEREO COMPONENT AMPLIFIER
- **(A)** 1-GROUND : APPOX. **12** VOLTS WITH THE IGNITION SW AT **ACC** OR **ON** POSITION
- **(A)** 10-GROUND : ALWAYS APPROX. **12** VOLTS
- **(A)** 9-GROUND : ALWAYS CONTINUITY

○ : PARTS LOCATION

CODE	SEE PAGE	CODE	SEE PAGE	CODE	SEE PAGE
C16	24	**J 4**	25	**R23**	27
F 9	25	**J 7**	25	**R24**	27
F10	25	**R 1** A	25	**S11** A	25
F11	25	**R 2**	25	**S12** B	25
F14	26	**R 3** B	25	**W 5**	27
F15	26	**R12**	27	**W 6**	27
J 3	25	**R13**	27		

⬭ : RELAY BLOCKS

CODE	SEE PAGE	RELAY BLOCKS (RELAY BLOCK LOCATION)
2	18	R/B NO. 2 (FRONT SIDE OF LEFT FENDER)

▭ : CONNECTOR JOINING WIRE HARNESS AND WIRE HARNESS

CODE	SEE PAGE	JOINING WIRE HARNESS AND WIRE HARNESS (CONNECTOR LOCATION)
EA1	30	COWL WIRE AND ENGINE ROOM MAIN WIRE (LEFT FENDER)
ID1	32	COWL WIRE AND FLOOR NO. 1 WIRE (LEFT KICK PANEL)
II1	32	COWL WIRE AND FLOOR NO. 2 WIRE (RIGHT KICK PANEL)
II2		
BJ1	34	FRONT DOOR LH WIRE AND COWL WIRE (LEFT KICK PANEL)
BK1	34	FRONT DOOR RH WIRE AND COWL WIRE (RIGHT KICK PANEL)
BM1	34	FLOOR NO. 2 WIRE AND FLOOR NO. 1 WIRE (UNDER THE CENTER CONSOLE)
BN1	34	REAR DOOR LH WIRE AND FLOOR NO. 1 WIRE (LEFT CENTER PILLAR)
BP1	34	REAR DOOR RH WIRE AND FLOOR NO. 2 WIRE (RIGHT CENTER PILLAR)
BR1	34	LUGGAGE ROOM NO. 1 WIRE AND FLOOR NO. 1 WIRE (LEFT QUARTER PANEL INNER)
BW1	36	ROOF NO. 2 WIRE AND FLOOR NO. 2 WIRE (RIGHT QUARTER PANEL INNER)

▽ : GROUND POINTS

CODE	SEE PAGE	GROUND POINTS LOCATION
ID	32	LEFT KICK PANEL
IE	32	RIGHT KICK PANEL
BF	34	UNDER THE CENTER CONSOLE BOX

⯃ : SPLICE POINTS

CODE	SEE PAGE	WIRE HARNESS WITH SPLICE POINTS	CODE	SEE PAGE	WIRE HARNESS WITH SPLICE POINTS
I 9	32	COWL WIRE	**I15**	32	COWL WIRE
I10			**B14**	36	FLOOR WIRE
I14			**B22**	36	FLOOR NO. 2 WIRE

C16

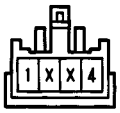

F 9, F10

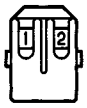

F11

(SEE PAGE 20)

F14, F15

J 3

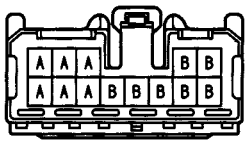

(HINT:SEE PAGE 7)

J 4

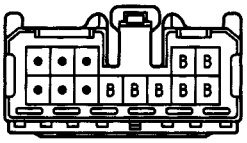

(HINT:SEE PAGE 7)

J 7 BLUE

(HINT:SEE PAGE 7)

R 1 (A) GRAY

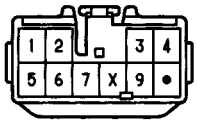

R 2

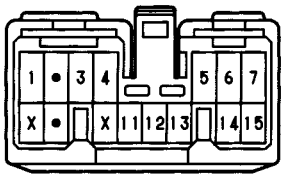

R 3 (B) GRAY

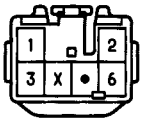

R12, R13

R23, R24

S11 (A)

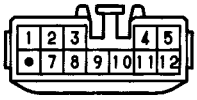

S12 (B)

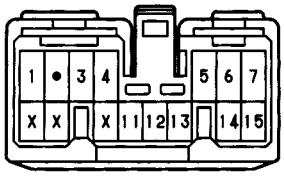

W 5

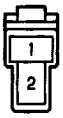

W 6

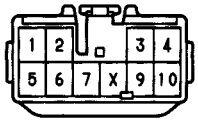

Brought to you by BirfMark

REAR HEATER

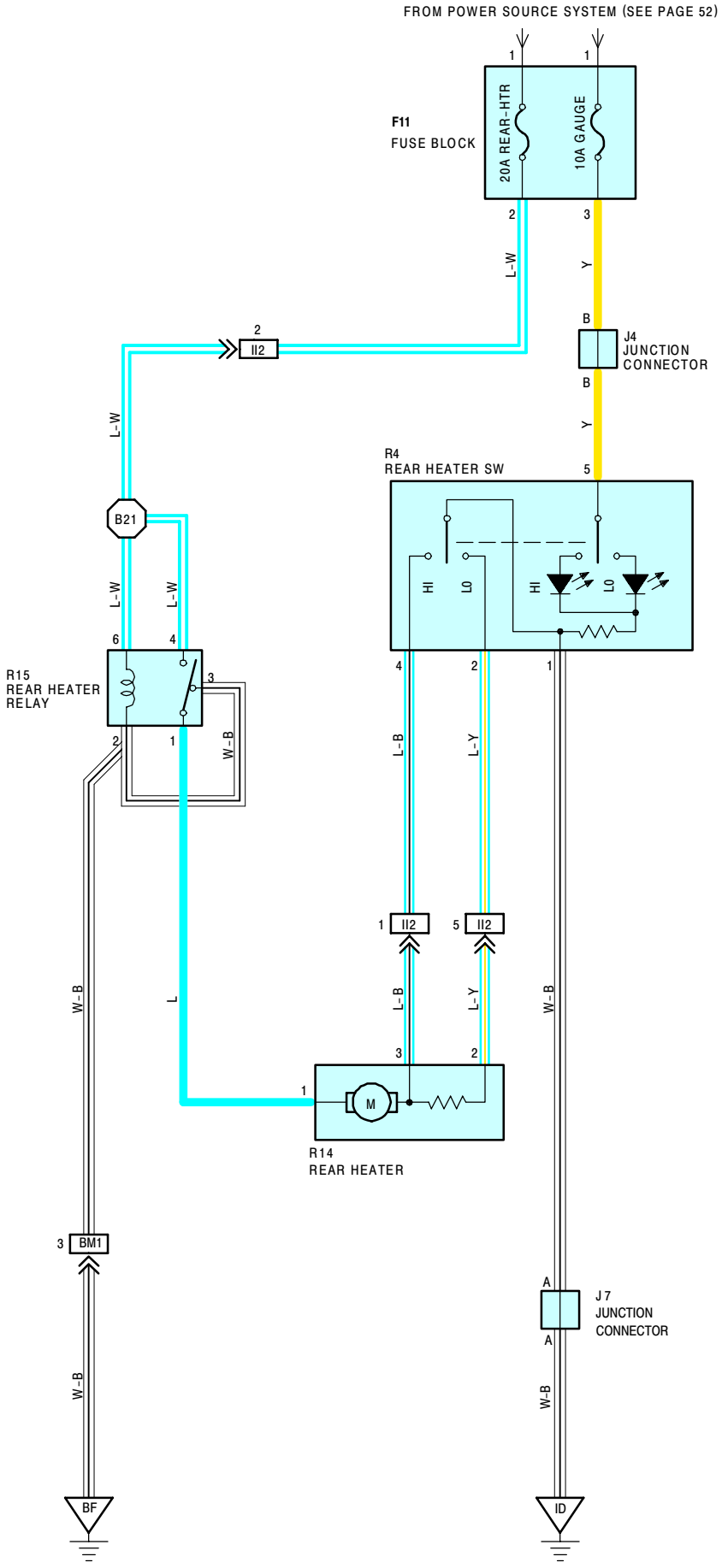

Brought to you by BirfMark

SERVICE HINTS

R 4 REAR HEATER SW
2-1 : CLOSED WITH THE IGNITION SW AT ON AND REAR HEATER SW AT **LO** POSITION
4-1 : CLOSED WITH THE IGNITION SW AT ON AND REAR HEATER SW AT **HI** POSITION
R15 REAR HEATER RELAY
4-1 : CLOSED WITH THE IGNITION SW AT **ON** POSITION

○ : PARTS LOCATION

CODE	SEE PAGE	CODE	SEE PAGE	CODE	SEE PAGE
F11	25	**J 7**	25	**R14**	27
J 4	25	**R 4**	25	**R15**	27

▭ : CONNECTOR JOINING WIRE HARNESS AND WIRE HARNESS

CODE	SEE PAGE	JOINING WIRE HARNESS AND WIRE HARNESS (CONNECTOR LOCATION)
II2	32	COWL WIRE AND FLOOR NO. 2 WIRE (RIGHT KICK PANEL)
BM1	34	FLOOR NO. 2 WIRE AND FLOOR NO. 1 WIRE (UNDER THE CENTER CONSOLE)

▽ : GROUND POINTS

CODE	SEE PAGE	GROUND POINTS LOCATION
ID	32	LEFT KICK PANEL
BF	34	UNDER THE CENTER CONSOLE BOX

⬡ : SPLICE POINTS

CODE	SEE PAGE	WIRE HARNESS WITH SPLICE POINTS	CODE	SEE PAGE	WIRE HARNESS WITH SPLICE POINTS
B21	36	FLOOR NO. 2 WIRE			

F11

(SEE PAGE 20)

J 4

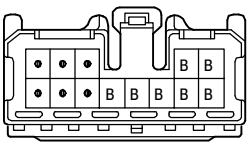

(HINT : SEE PAGE 7)

J 7 BLUE

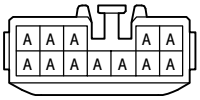

(HINT : SEE PAGE 7)

R 4 BLACK

R14

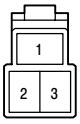

R15

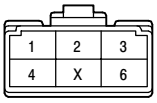

COMBINATION METER

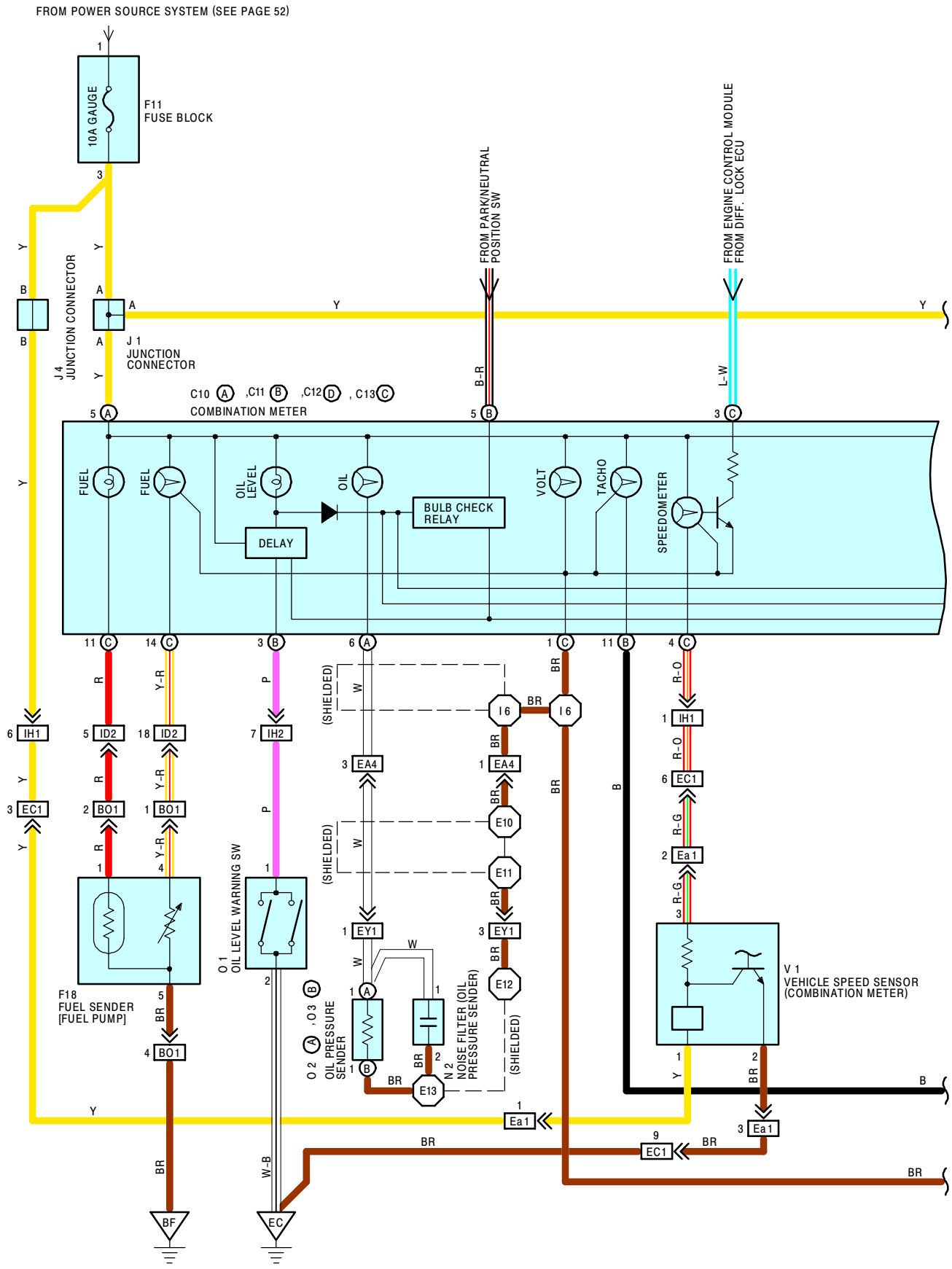

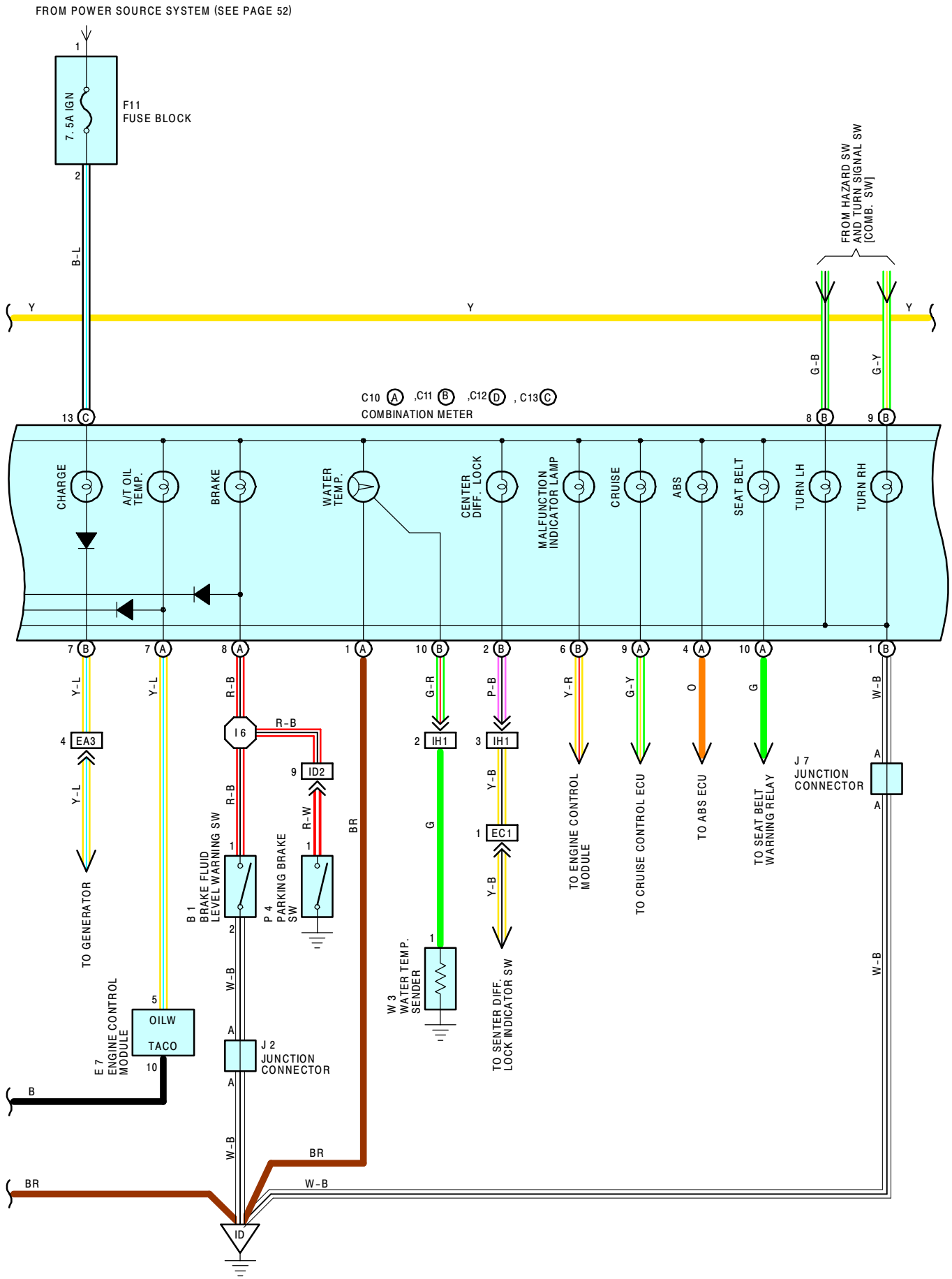
FROM POWER SOURCE SYSTEM (SEE PAGE 52)
7.5A IGN
F11
FUSE BLOCK
B-L
Y
FROM HAZARD SW
AND TURN SIGNAL SW
[COMB. SW]
G-B
G-Y
C10 A ,C11 B ,C12 D , C13 C
COMBINATION METER
CHARGE
A/T OIL TEMP.
BRAKE
WATER TEMP.
CENTER DIFF. LOCK
MALFUNCTION INDICATOR LAMP
CRUISE
ABS
SEAT BELT
TURN LH
TURN RH
Y-L
R-B
G-R
P-B
Y-R
G-Y
O
G
W-B
EA3
I6
ID2
IH1
EC1
TO GENERATOR
B 1
BRAKE FLUID
LEVEL WARNING SW
P 4
PARKING BRAKE
SW
R-W
BR
G
Y-B
TO ENGINE CONTROL
MODULE
TO CRUISE CONTROL ECU
TO ABS ECU
TO SEAT BELT
WARNING RELAY
J 7
JUNCTION
CONNECTOR
E 7
ENGINE CONTROL
MODULE
OILW
TACO
W 3
WATER TEMP.
SENDER
TO SENTER DIFF.
LOCK INDICATOR SW
J 2
JUNCTION
CONNECTOR
B
ID

Brought to you by BirfMark

COMBINATION METER

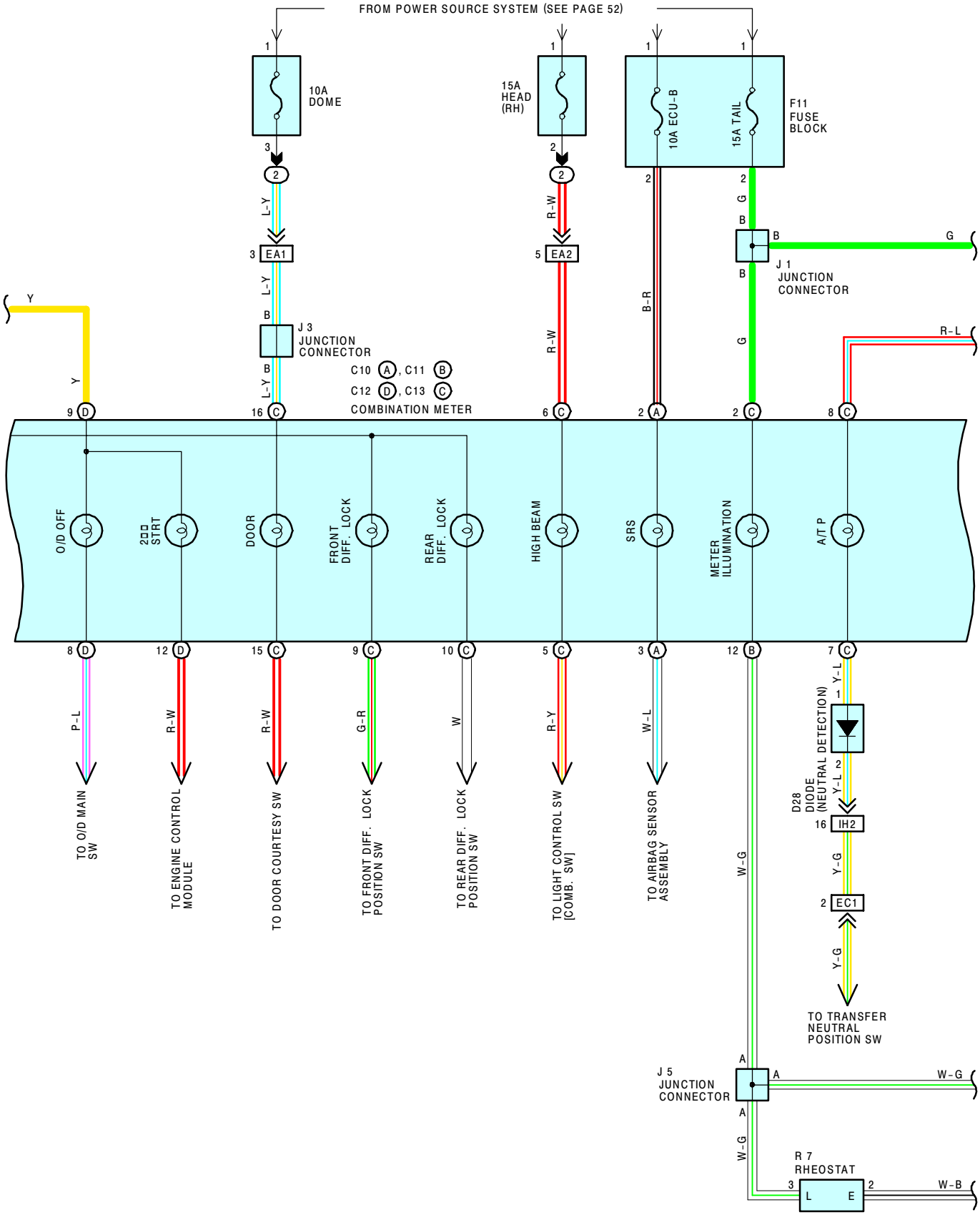

Brought to you by BirfMark

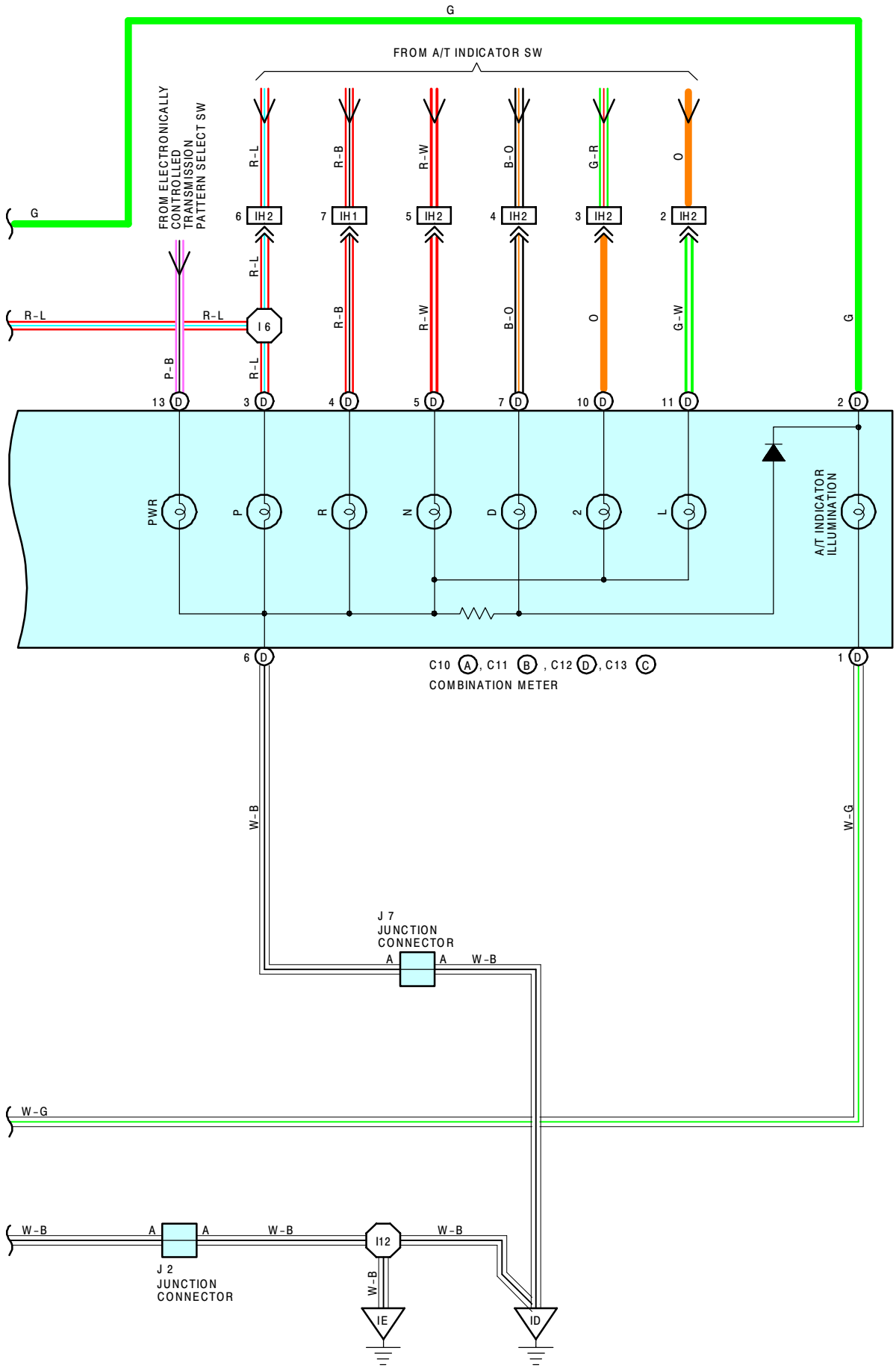
G
FROM A/T INDICATOR SW
FROM ELECTRONICALLY CONTROLLED TRANSMISSION PATTERN SELECT SW
R-L
R-B
R-W
B-O
G-R
O
IH2
IH1
I6
P-B
G-W
PWR
P
R
N
D
2
L
A/T INDICATOR ILLUMINATION
C10 A, C11 B, C12 D, C13 C
COMBINATION METER
W-B
W-G
J 7 JUNCTION CONNECTOR
J 2 JUNCTION CONNECTOR
I12
IE
ID

COMBINATION METER

SERVICE HINTS

B 1 BRAKE FLUID LEVEL WARNING SW
1-2 : CLOSED WITH THE FLOAT DOWN
C10 (A), C11 (B), C12 (D), C13 (C) COMBINATION METER
(C) 16-GROUND : ALWAYS APPROX. **12** VOLTS
(A) 5, **(C)** 13-GROUND : APPROX. **12** VOLTS WITH THE IGNITION SW AT **ON** POSITION
(A) 1, **(B)** 1, **(C)** 1, **(D)** 6-GROUND : ALWAYS CONTINUITY
P 4 PARKING BRAKE SW
1-GROUND : CLOSED WITH THE PARKING BRAKE LEVER PULLED UP

: PARTS LOCATION

CODE		SEE PAGE	CODE	SEE PAGE	CODE		SEE PAGE
B 1		22	**F18**	26	**O 1**		23
C10	A	24	**J 1**	25	**O 2**	A	23
C11	B	24	**J 2**	25	**O 3**	B	23
C12	D	24	**J 3**	25	**P 4**		27
C13	C	24	**J 4**	25	**R 7**		25
D28		24	**J 5**	25	**V 1**		23
E 7		24	**J 7**	25	**W 3**		23
F11		25	**N 2**	23			

: RELAY BLOCKS

CODE	SEE PAGE	RELAY BLOCKS (RELAY BLOCK LOCATION)
2	18	R/B NO. 2 (FRONT SIDE OF LEFT FENDER)

: CONNECTOR JOINING WIRE HARNESS AND WIRE HARNESS

CODE	SEE PAGE	JOINING WIRE HARNESS AND WIRE HARNESS (CONNECTOR LOCATION)
EA1	30	COWL WIRE AND ENGINE ROOM MAIN WIRE (LEFT FENDER)
EA2		
EA3		
EA4	30	COWL WIRE AND ENGINE ROOM MAIN WIRE (RIGHT FENDER)
EC1	30	ENGINE WIRE AND TRANSMISSION WIRE (NEAR THE STARTER)
EY1	30	OIL PRESSURE SWITCH WIRE AND ENGINE ROOM MAIN WIRE (NEAR THE AIR CLEANER)
Ea1	30	TRANSMISSION WIRE AND SPEED SENSOR WIRE (NEAR THE TRANSMISSION)
ID2	32	COWL WIRE AND FLOOR NO. 1 WIRE (LEFT KICK PANEL)
IH1	32	ENGINE WIRE AND COWL WIRE (BEHIND GLOVE BOX)
IH2		
BO1	34	FLOOR NO. 1 WIRE AND LUGGAGE ROOM NO. 2 WIRE (BESIDE THE FUEL TANK)

: GROUND POINTS

CODE	SEE PAGE	GROUND POINTS LOCATION
EC	30	AIR INTAKE CHAMBER
ID	32	LEFT KICK PANEL
IE	32	RIGHT KICK PANEL
BF	34	UNDER THE CENTER CONSOLE BOX

: SPLICE POINTS

CODE	SEE PAGE	WIRE HARNESS WITH SPLICE POINTS	CODE	SEE PAGE	WIRE HARNESS WITH SPLICE POINTS
E10	30	ENGINE ROOM MAIN WIRE	**E13**	30	OIL PRESSURE SWITCH WIRE
E11			**I 6**	32	COWL WIRE
E12	30	OIL PRESSURE SWITCH WIRE			

B 1 GRAY

C10 (A) GRAY

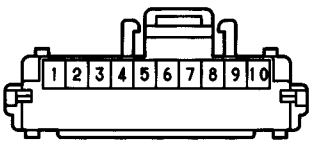

C11 (B) BLUE

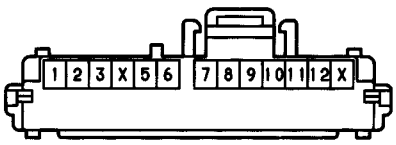

C12 (D) BROWN

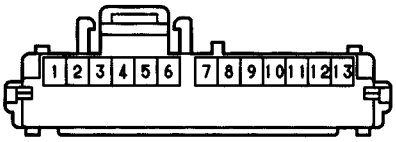

C13 (C)

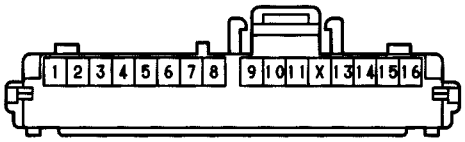

D28 BLACK

E 7 DARK GRAY

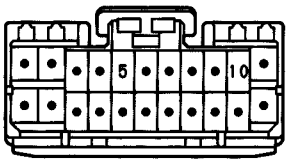

F11

(SEE PAGE 18)

F18 DARK GRAY

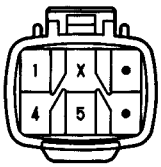

J 1 BLUE

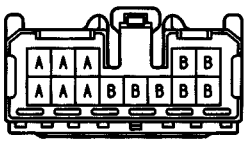

(HINT:SEE PAGE 7)

J 2 BLUE

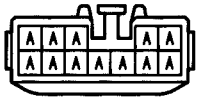

(HINT:SEE PAGE 7)

J 3

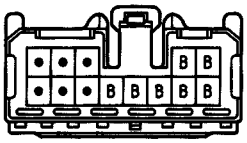

(HINT:SEE PAGE 7)

J 4

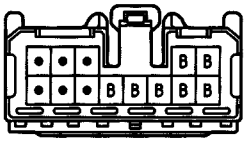

(HINT:SEE PAGE 7)

J 5 BLUE

(HINT:SEE PAGE 7)

J 7 BLUE

(HINT:SEE PAGE 7)

N 2 BLACK

O 1 DARK GRAY

O 2 (A) BLACK

O 3 (B) GRAY

P 4

R 7

V 1 BLACK

W 3 GRAY

Brought to you by BirfMark

SYSTEM OUTLINE

1. HEATER BLOWER MOTOR OPERATION

THE CURRENT FLOWS CONSTANTLY FROM THE **FL HEATER** FUSE TO **TERMINAL 5** OF THE HEATER RELAY. WHEN THE IGNITION SW IS TURNED ON, THE CURRENT FLOWS THROUGH **GAUGE** FUSE TO **TERMINAL 5** OF THE BLOWER SPEED CONTROL RELAY, AND TO **TERMINAL 3** OF THE HEATER RELAY → **TERMINAL 1** → **TERMINAL (A) 1** OF THE HEATER CONTROL SW.

***** LOW SPEED OPERATION

WHEN THE BLOWER SW (HEATER CONTROL SW) IS SET TO **LO** POSITION, THE CURRENT TO **TERMINAL (A) 1** OF THE HEATER CONTROL SW FLOWS TO **TERMINAL (B) 16** → **GROUND**, ACTIVATING THE HEATER RELAY ON. AS A RESULT, THE CURRENT TO **TERMINAL 5** OF THE HEATER RELAY FLOWS TO **TERMINAL 4** → **TERMINAL 1** OF THE BLOWER MOTORS → **TERMINAL 2** → **TERMINAL 1** OF THE BLOWER RESISTOR → **TERMINAL 4** → **GROUND**, CAUSING THE BLOWER MOTORS TO OPERATE AT LOW SPEED.

***** HIGH SPEED OPERATION

WHEN THE BLOWER SW (HEATER CONTROL SW) IS SET TO **HI** POSITION, THE CURRENT TO **TERMINAL (A) 1** OF THE HEATER CONTROL SW FLOWS TO **TERMINAL (B) 16** → GROUND, ACTIVATING THE HEATER RELAY. AS A RESULT, THE CURRENT TO **TERMINAL 5** OF THE BLOWER SPEED CONTROL RELAY FLOWS TO **TERMINAL 7** → **TERMINAL (B) 13** OF THE HEATER CONTROL SW → **TERMINAL (B) 16** → **GROUND**, ACTIVATING THE BLOWER SPEED CONTROL RELAY. THIS CAUSES THE CURRENT TO FLOW FROM **TERMINAL 5** OF THE HEATER RELAY TO **TERMINAL 4** → **TERMINAL 1** OF THE BLOWER MOTORS → **TERMINAL 2** → **TERMINAL 4** OF THE BLOWER SPEED CONTROL RELAY → **TERMINAL 3** → **GROUND,** CAUSING THE BLOWER MOTORS TO OPERATE AT HIGH SPEED.

***** MEDIUM SPEED OPERATION (OPERATION AT M1, M2)

WHEN THE BLOWER SW (HEATER CONTROL SW) IS SET TO **M1** POSITION, THE CURRENT TO **TERMINAL (A) 1** OF THE HEATER CONTROL SW FLOWS TO **TERMINAL (B) 16** → **GROUND**, ACTIVATING THE HEATER RELAY. AS A RESULT, THE CURRENT FROM **TERMINAL 5** OF THE BLOWER SPEED CONTROL RELAY TO **TERMINAL 6** → **TERMINAL (B) 9** OF THE HEATER CONTROL SW → **TERMINAL (B) 16** → **GROUND**, ACTIVATING THE BLOWER SPEED CONTROL RELAY. THIS CAUSES THE CURRENT FROM **TERMINAL 5** OF THE HEATER RELAY TO **TERMINAL 4** → **TERMINAL 1** OF THE BLOWER MOTORS → **TERMINAL 2** → **TERMINAL 1** OF THE BLOWER RESISTOR → **TERMINAL 2** → **TERMINAL 1** OF THE BLOWER SPEED CONTROL RELAY → **TERMINAL 3** → **GROUND**, CAUSING THE BLOWER MOTORS TO OPERATE AT MEDIUM LOW SPEED. WHEN THE BLOWER SW (HEATER CONTROL SW) IS SET TO **M2** POSITION, THE CURRENT TO **TERMINAL (A) 1** OF THE HEATER CONTROL SW FLOWS TO **TERMINAL (B) 16** → **GROUND**, ACTIVATING THE HEATER RELAY. AS A RESULT, THE CURRENT FLOWS FROM **TERMINAL 5** OF THE BLOWER SPEED CONTROL RELAY TO **TERMINAL 8** → **TERMINAL (B) 10** OF THE HEATER CONTROL SW → **TERMINAL (B) 16** → **GROUND**, ACTIVATING THE BLOWER SPEED CONTROL RELAY. THIS CAUSES THE CURRENT TO FLOW FROM **TERMINAL 5** OF THE HEATER RELAY TO **TERMINAL 4** → **TERMINAL 1** OF THE BLOWER MOTORS → **TERMINAL 2** → **TERMINAL 1** OF THE BLOWER RESISTOR → **TERMINAL 3** → **TERMINAL 2** OF THE BLOWER SPEED CONTROL RELAY → **TERMINAL 3** → **GROUND**, CAUSING THE BLOWER MOTOR TO OPERATE AT MEDIUM HI SPEED. THE CURRENT TO THE BLOWER MOTORS AT THIS TIME IS STRONGER THAN IT WAS FOR THE **M1** POSITION, SO THE BLOWER MOTORS OPERATES FASTER FOR M2 THAN IT DOES FOR M1.

2. OPERATION AIR INLET CONTROL SERVO MOTOR

(SWITCHING FROM FRESH TO RECIRC)

WITH THE IGNITION SW TURNED ON, THE CURRENT FLOWS FROM **GAUGE** FUSE TO **TERMINAL 1** OF THE AIR INLET CONTROL SERVO MOTOR. WHEN THE RECIRC/FRESH SW IS SWITCHED TO THE FRESH SIDE, THE CURRENT FLOWS FROM **TERMINAL 1** OF THE AIR INLET CONTROL SERVO MOTOR TO **TERMINAL 3** → **TERMINAL (A) 18** OF THE HEATER CONTROL SW → **TERMINAL (B) 16** → **GROUND**, THIS CAUSES THE MOTOR TO ROTATE AND THE DAMPER TO MOVE TO THE RECIRC SIDE. WHEN IT IS IN THE RECIRC POSITION, THE CURRENT IS CUT INSIDE THE SERVO MOTOR, AND THE DAMPER STOPS AT THAT POSITION.

(SWITCHING FROM RECIRC TO FRESH)

WITH THE IGNITION SW ON, WHEN THE RECIRC/FRESH SW IS SWITCHED TO THE RECIRC SIDE, THE CURRENT FLOWS FROM **TERMINAL 1** OF THE AIR INLET CONTROL SERVO MOTOR TO **TERMINAL 2** → **TERMINAL (A) 19** OF THE HEATER CONTROL SW → **TERMINAL (B) 16** → **GROUND**, THIS CAUSES THE MOTOR TO ROTATE AND DAMPER TO MOVE TO THE FRESH SIDE. WHEN IT IS IN THE **FRESH** POSITION, THE CURRENT IS CUT INSIDE THE SERVO MOTOR, AND THE DAMPER STOPS AT THAT POSITION.

Brought to you by BirfMark

3. OPERATION OF AIR VENT MODE CONTROL SERVO MOTOR

WITH THE IGNITION SW TURNED ON, THE CURRENT FLOWS FROM **GAUGE** FUSE TO **TERMINAL 5** OF THE AIR VENT MODE CONTROL SERVO MOTOR → **TERMINAL 6** → **GROUND**, AND THE DAMPER MOVES TO THE POSITION OF THE MODE SELECTION SW ON THE CONTROL SW WHICH IS ON. WHEN THE FOOT SW OF THE HEATER CONTROL SW IS TURNED ON WITH THE **DEF** POSITION, A SIGNAL IS INPUT FROM **TERMINAL 7** OF THE AIR VENT MODE CONTROL SERVO MOTOR TO **TERMINAL (B) 4** OF THE HEATER CONTROL SW. AS A RESULT, THE SERVO MOTOR OPERATES UNTIL THE DAMPER REACHES TO **DEF** POSITION. WHEN THIS OCCURS, THE SIGNAL TO THE HEATER CONTROL SW IS SHUT OFF AND ROTATION OF THE MOTOR STOPS. SWITCHING TO OTHER MOVEMENT IS CONTROLLED BY THE SERVO MOTOR ACCORDING TO THE FOLLOWING SIGNALS:

1. **FACE** POSITION, A SIGNAL INPUT FROM **TERMINAL 1** OF THE SERVO MOTOR TO **TERMINAL (B) 14** OF THE HEATER CONTROL SW.

2. **BI-LEVEL** POSITION, A SIGNAL INPUT FROM **TERMINAL 2** OF THE SERVO MOTOR TO **TERMINAL (A) 12** OF THE HEATER CONTROL SW.

3. **FOOT** POSITION, A SIGNAL INPUT FROM **TERMINAL 3** OF THE SERVO MOTOR TO **TERMINAL (A) 7** OF THE HEATER CONTROL SW.

4. **FOOT/DEF** POSITION, A SIGNAL INPUT FROM **TERMINAL 4** OF THE SERVO MOTOR TO **TERMINAL (B) 11** OF THE HEATER CONTROL SW.

4. AIR MIX CONTROL SERVO MOTOR

VOLTAGE IS APPLIED TO **TERMINALS 11** AND **12** OF THE A/C SYSTEM AMPLIFIER FROM THE TEMPERATURE CONTROL LEVER INSIDE THE HEATER CONTROL SW AND FROM THE POTENTIOMETER INSIDE THE AIR MIX CONTROL SERVO MOTOR. THIS VOLTAGE IS KEPT AT A FIXED LEVEL BY THE A/C SYSTEM AMPLIFIER. WHEN THE TEMPERATURE CONTROL LEVER OF THE HEATER CONTROL SW IS MOVED TO 'COOL', THE VOLTAGE APPLIED TO **TERMINAL 12** OF THE A/C SYSTEM AMPLIFIER FROM **TERMINAL (B) 3** OF THE HEATER CONTROL SW CHANGES. AT THIS TIME, THE A/C SYSTEM AMPLIFIER COMPARES THE VOLTAGE FROM **TERMINAL 2** OF THE AIR MIX CONTROL SERVO MOTOR WITH THE VOLTAGE APPLIED TO **TERMINAL 11** OF THE A/C SYSTEM AMPLIFIER. THIS ACTIVATES THE A/C SYSTEM AMPLIFIER, SO THE CURRENT FLOWS FROM **TERMINAL 6** OF THE AMPLIFIER TO **TERMINAL 5** OF THE AIR MIX CONTROL SERVO MOTOR → **TERMINAL 4** → **TERMINAL 1** OF THE A/C SYSTEM AMPLIFIER, AND THE AIR MIX CONTROL SERVO MOTOR CHANGES TO THE 'COOL' SIDE. THEN WHEN THE VOLTAGE FROM THE POTENTIOMETER INSIDE THE SERVO MOTOR EQUALS THE VOLTAGE FROM THE TEMPERATURE CONTROL LEVER INSIDE THE HEATER CONTROL SW, THE A/C SYSTEM AMPLIFIER CUTS OFF POWER TO THE MOTOR. WHEN THE TEMPERATURE CONTROL LEVER IS MOVED TO THE 'HOT' SIDE, THE A/C SYSTEM AMPLIFIER OPERATES THE SAME AS FOR 'COOL' OPERATION, SO THE CURRENT FLOWS FROM **TERMINAL 1** OF THE A/C SYSTEM AMPLIFIER TO **TERMINAL 4** OF THE AIR MIX CONTROL SERVO MOTOR → **TERMINAL 5** → **TERMINAL 6** OF THE A/C SYSTEM AMPLIFIER, CHANGING THE MOTOR TO THE 'HOT' SIDE. WHEN THE VOLTAGE OF THE POTENTIOMETER AND VOLTAGE OF THE TEMPERATURE CONTROL LEVEL ARE THE SAME, POWER TO THE MOTOR IS CUT OFF.

5. AIR CONDITIONING OPERATION

WHEN THE IGNITION SW IS TURNED ON, THE CURRENT FROM THE **GAUGE** FUSE FLOWS THROUGH THE THE A/C DUAL PRESSURE SW TO **TERMINAL 3** OF THE A/C AMPLIFIER. IF THE HEATER CONTROL SW IS THEN TURNED ON, THE CURRENT FLOWS FROM THE **FL HEATER** FUSE THROUGH THE **A.C.** FUSE TO **TERMINAL (B) 17** OF THE HEATER CONTROL SW. WHEN THE A/C IS TURNED ON, THE CURRENT FLOWS FROM **TERMINAL (B) 17** OF THE HEATER CONTROL SW TO **TERMINAL (B) 6** → **TERMINAL 2** OF THE A/C AMPLIFIER, ACTIVATING THE A/C AMPLIFIER. THE CURRENT THEN FLOWS FROM **TERMINAL 7** OF THE A/C AMPLIFIER TO **TERMINAL 4** OF THE ENGINE COOLANT TEMP. RELAY → **TERMINAL 3** → **TERMINAL 1** OF A/C MAGNETIC CLUTCH → **GROUND**. THIS CAUSES THE COMPRESSOR TO START. WHEN THE ENGINE COOLANT TEMPERATURE IS APPROX. **108**°C (**226**°F), THE WATER TEMP. SW (A/C) IS TURNED ON AND THE A/C CUT RELAY IS ACTIVATED. THIS TURNS THE COMPRESSOR OFF AND STOPS THE AIR CONDITIONING. THE AIR CONDITIONING ALSO TURNS OFF, IF A SIGNAL IS INPUT TO THE A/C AMPLIFIER THAT THE AIR OUTLET TEMPERATURE IS LOW (BELOW APPROX. **3**°C) OR THE REFRIGERANT PRESSURE IS ABNORMALLY LOW.

AIR CONDITIONING

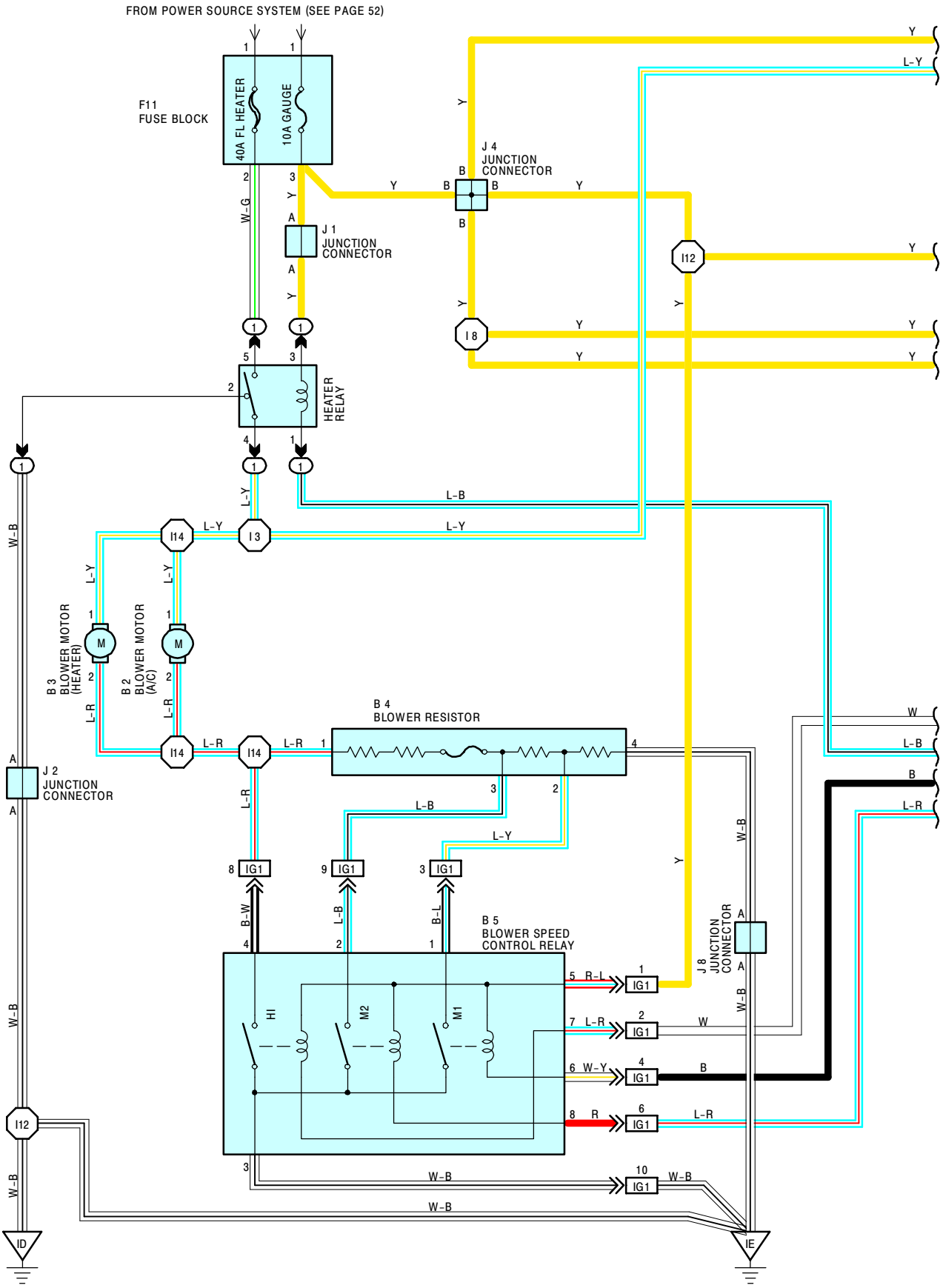

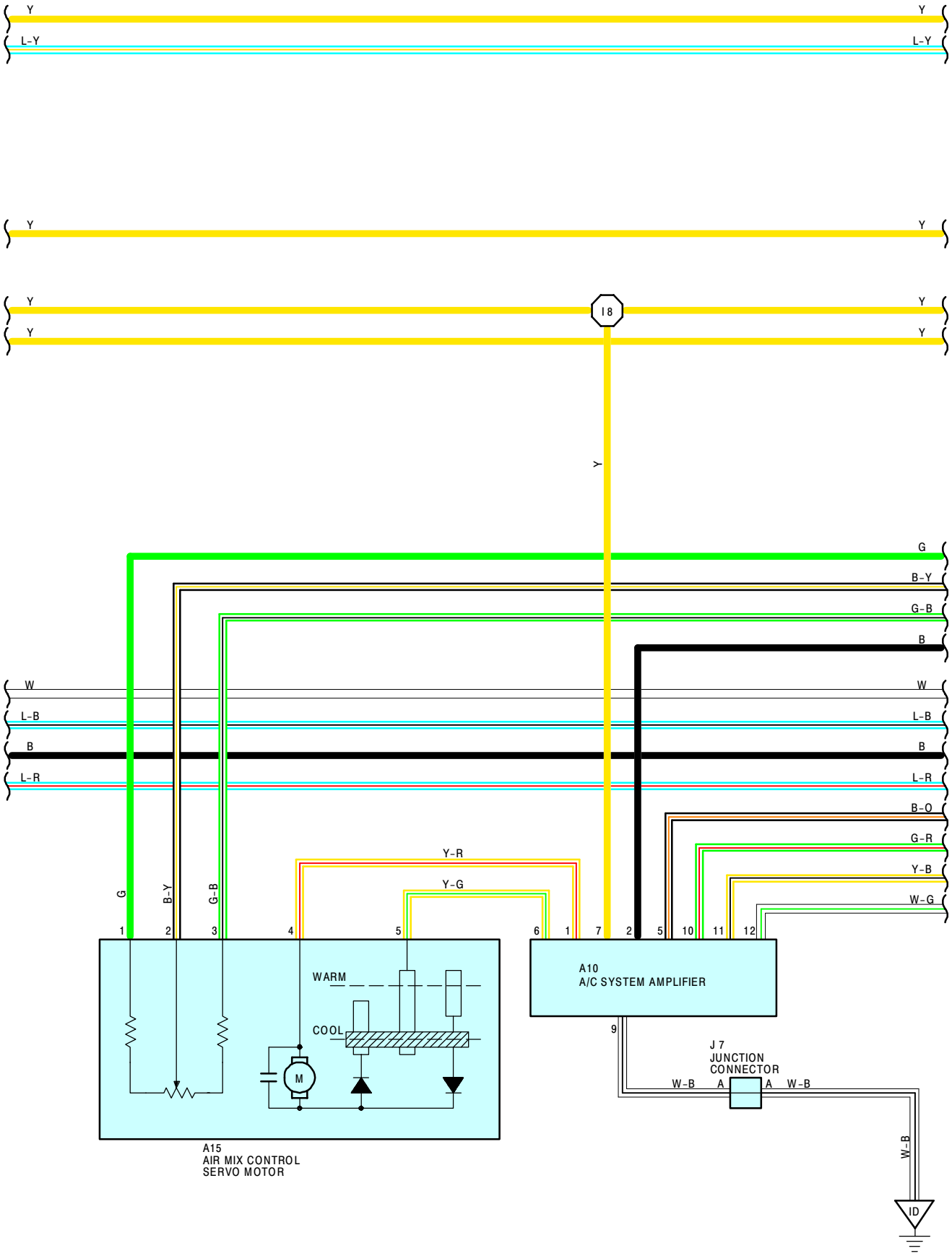
Y
L-Y
I 8
G
B-Y
G-B
B
W
L-B
L-R
B-O
G-R
Y-B
W-G
Y-R
Y-G
1
2
3
4
5
6
7
10
11
12
WARM
COOL
M
A15
AIR MIX CONTROL
SERVO MOTOR
A10
A/C SYSTEM AMPLIFIER
9
J 7
JUNCTION
CONNECTOR
W-B
A
ID

AIR CONDITIONING

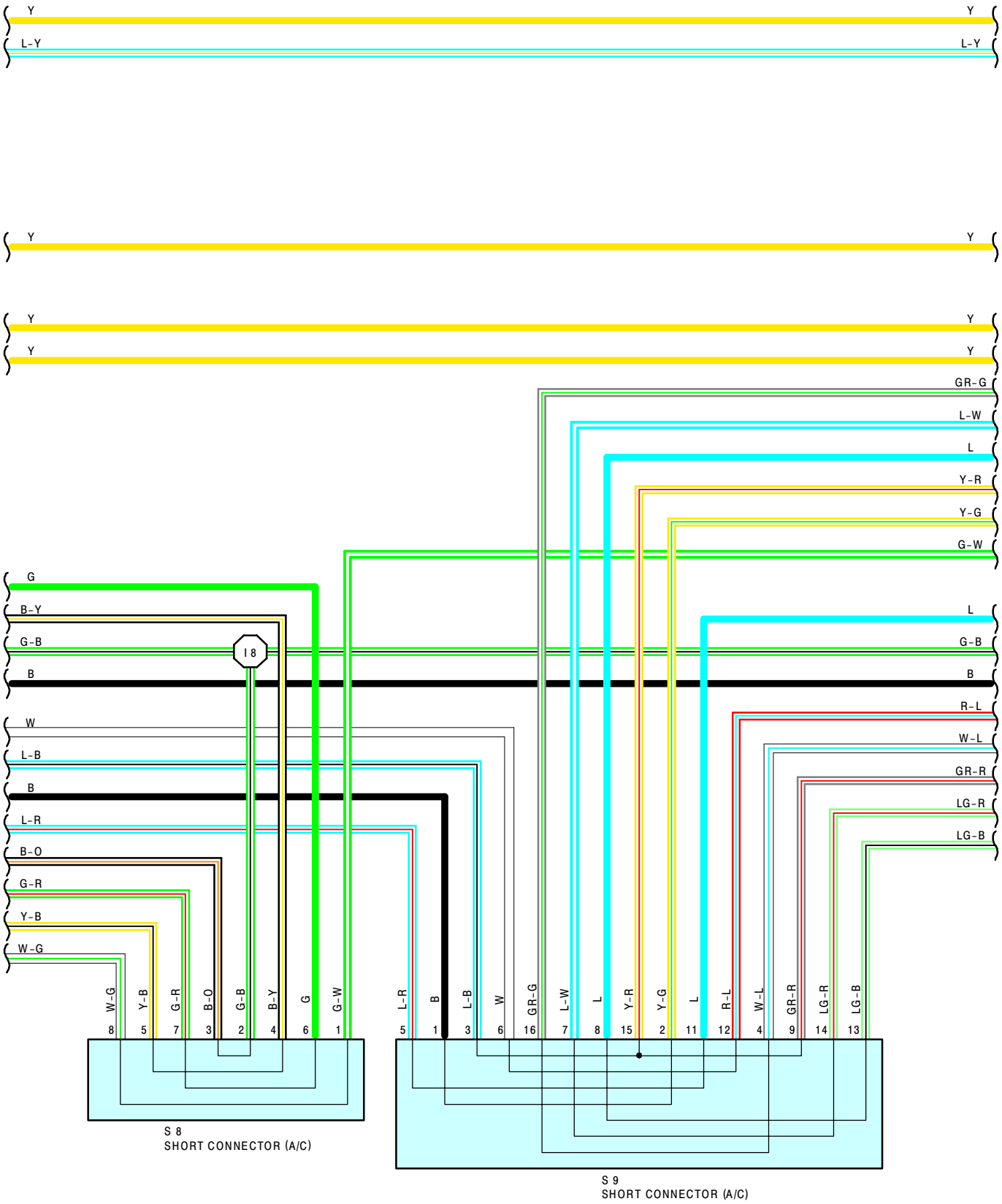

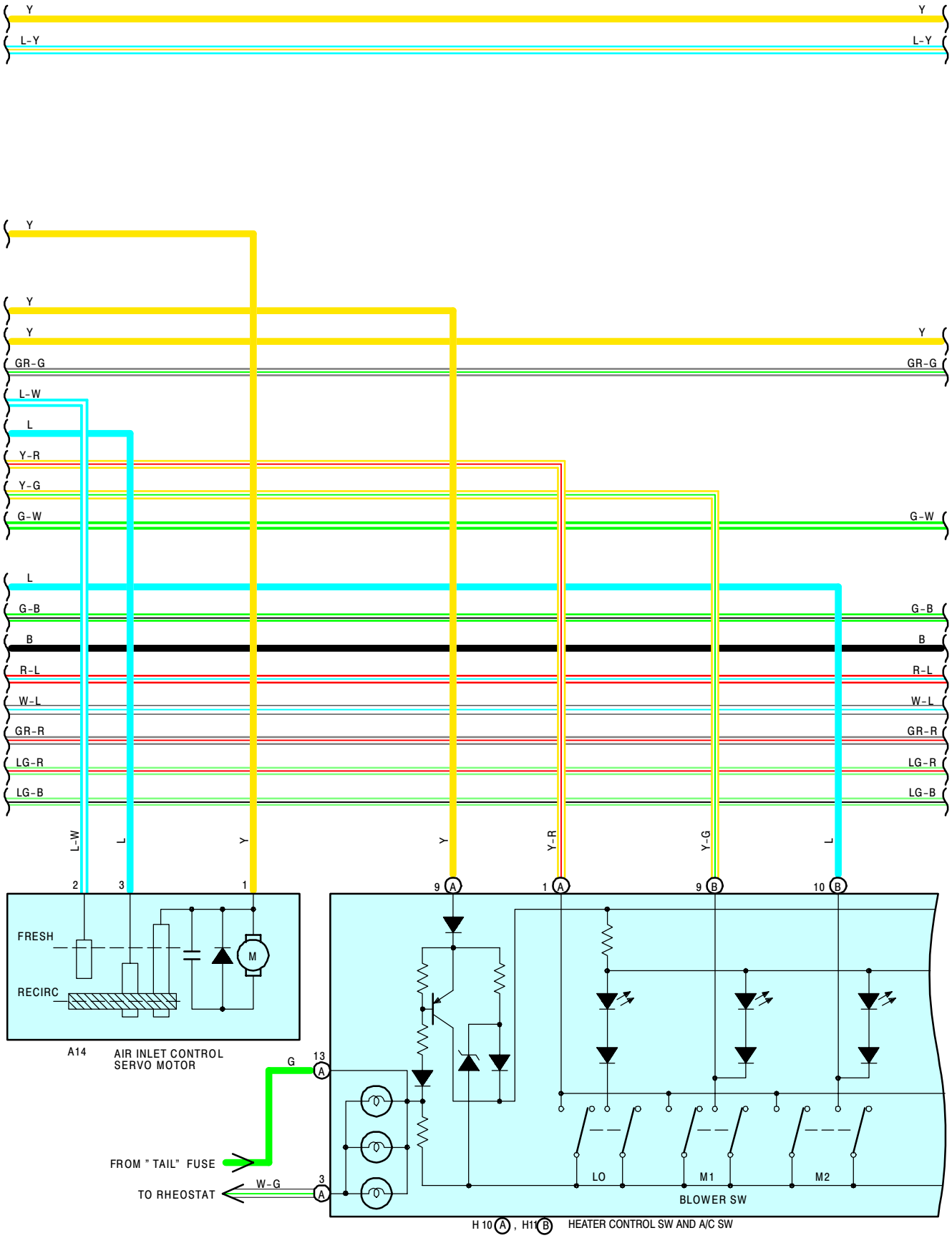
Y
L-Y
GR-G
L-W
L
Y-R
Y-G
G-W
G-B
B
R-L
W-L
GR-R
LG-R
LG-B
2
3
1
9 A
1 A
9 B
10 B
FRESH
RECIRC
M
A14
AIR INLET CONTROL
SERVO MOTOR
G
13 A
FROM " TAIL" FUSE
W-G
3 A
TO RHEOSTAT
LO
M1
M2
BLOWER SW
H 10 A , H11 B HEATER CONTROL SW AND A/C SW

AIR CONDITIONING

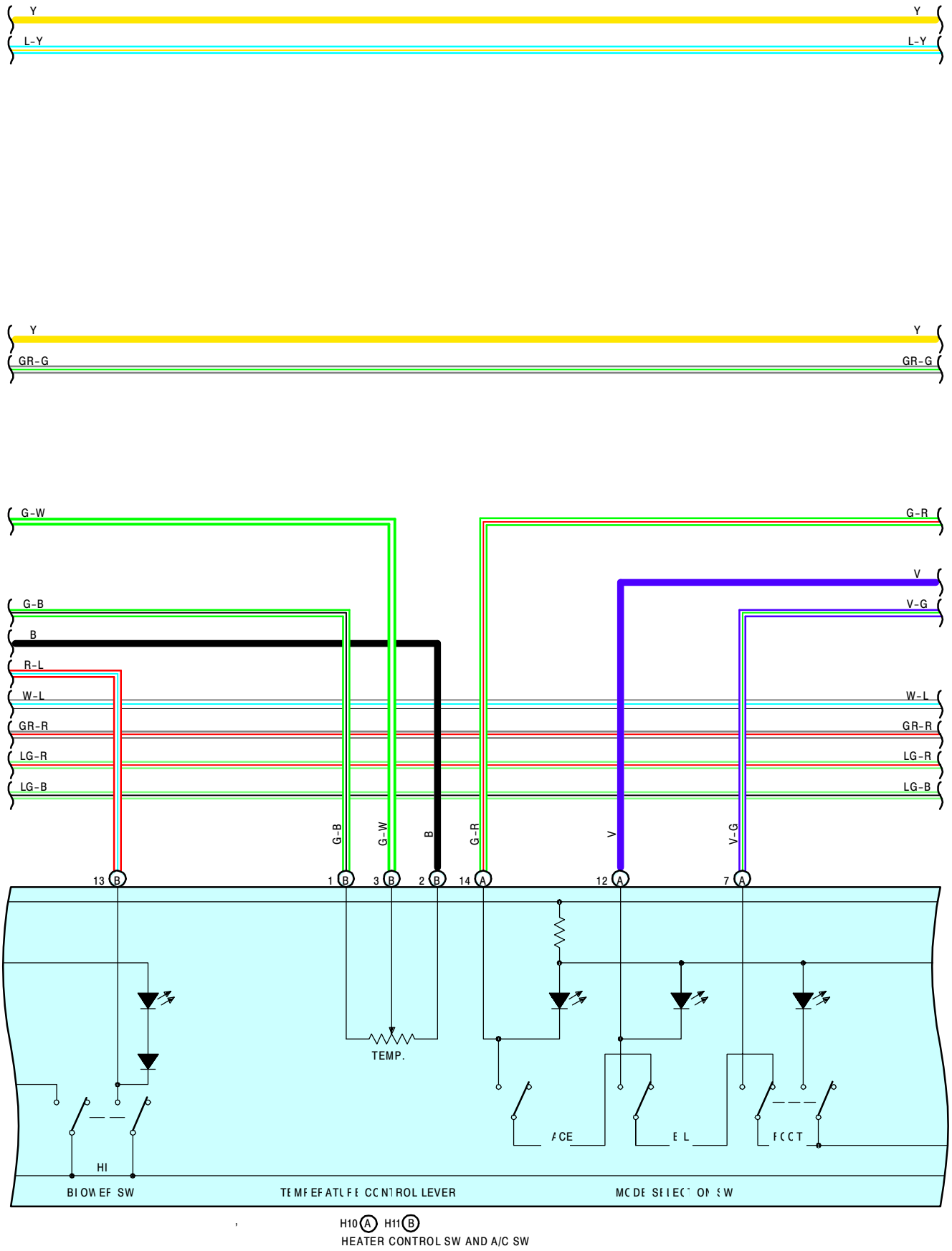

H10 (A) H11 (B)
HEATER CONTROL SW AND A/C SW

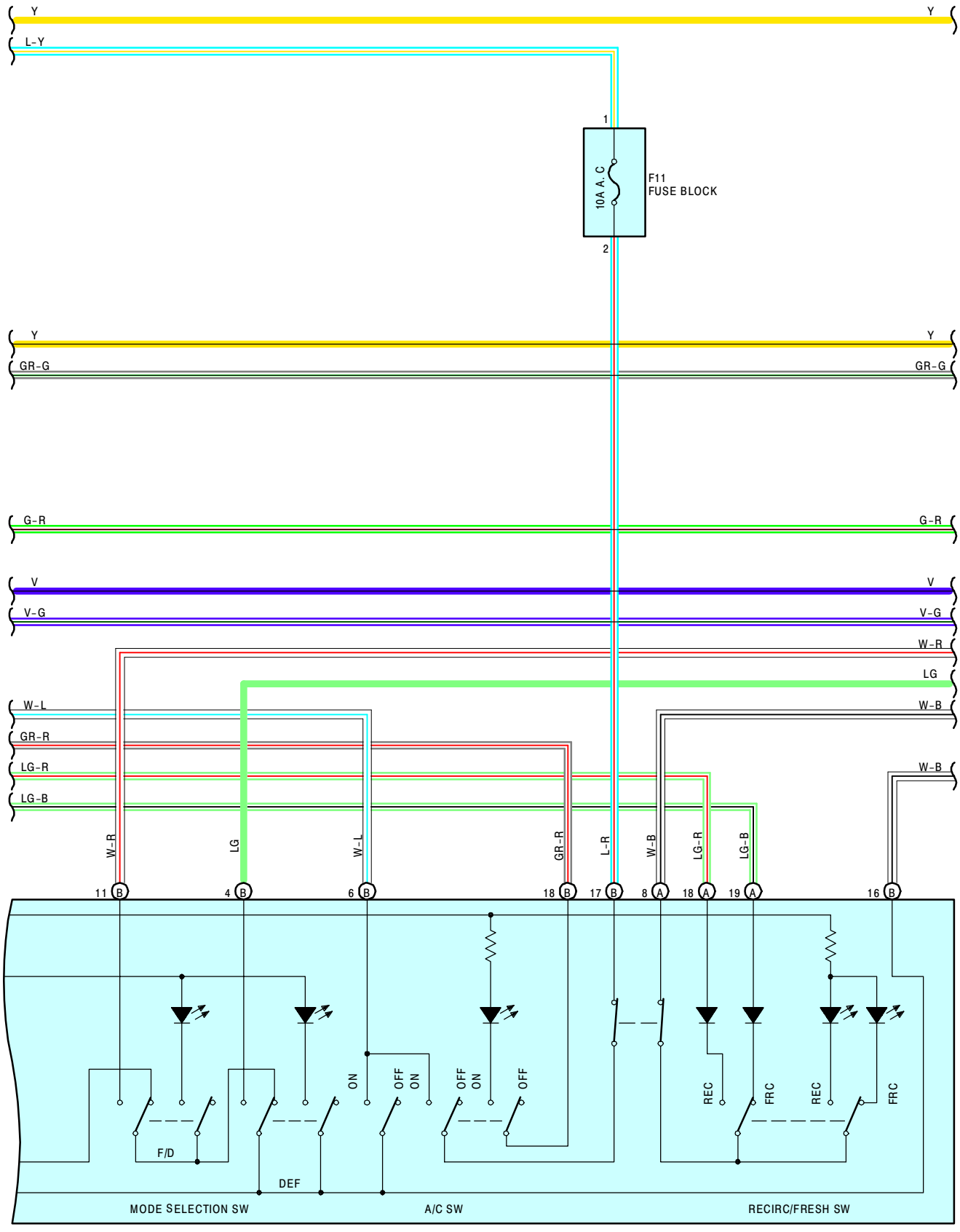

H 10 (A) H 11 (B)
HEATER CONTROL SW AND A/C SW

AIR CONDITIONING

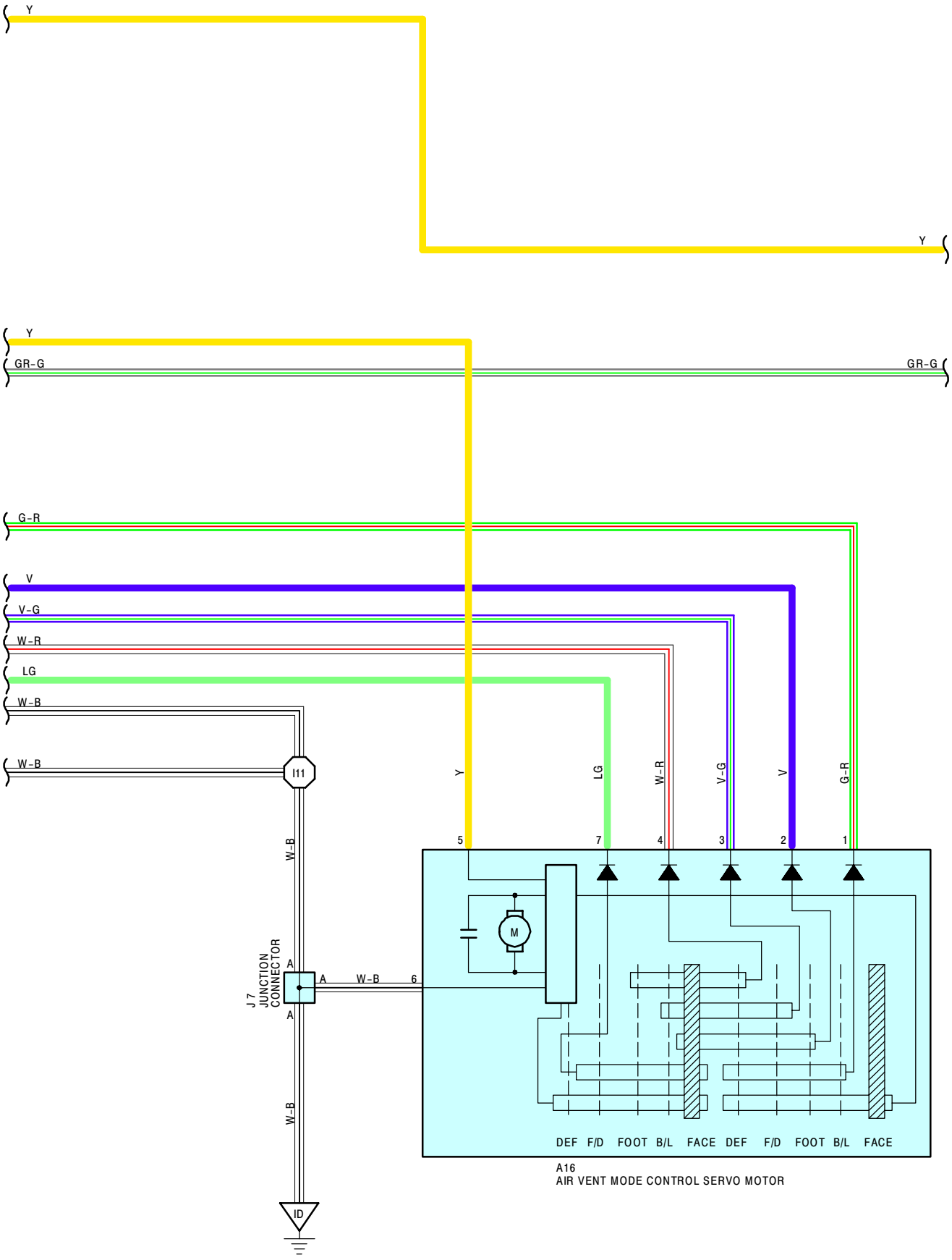

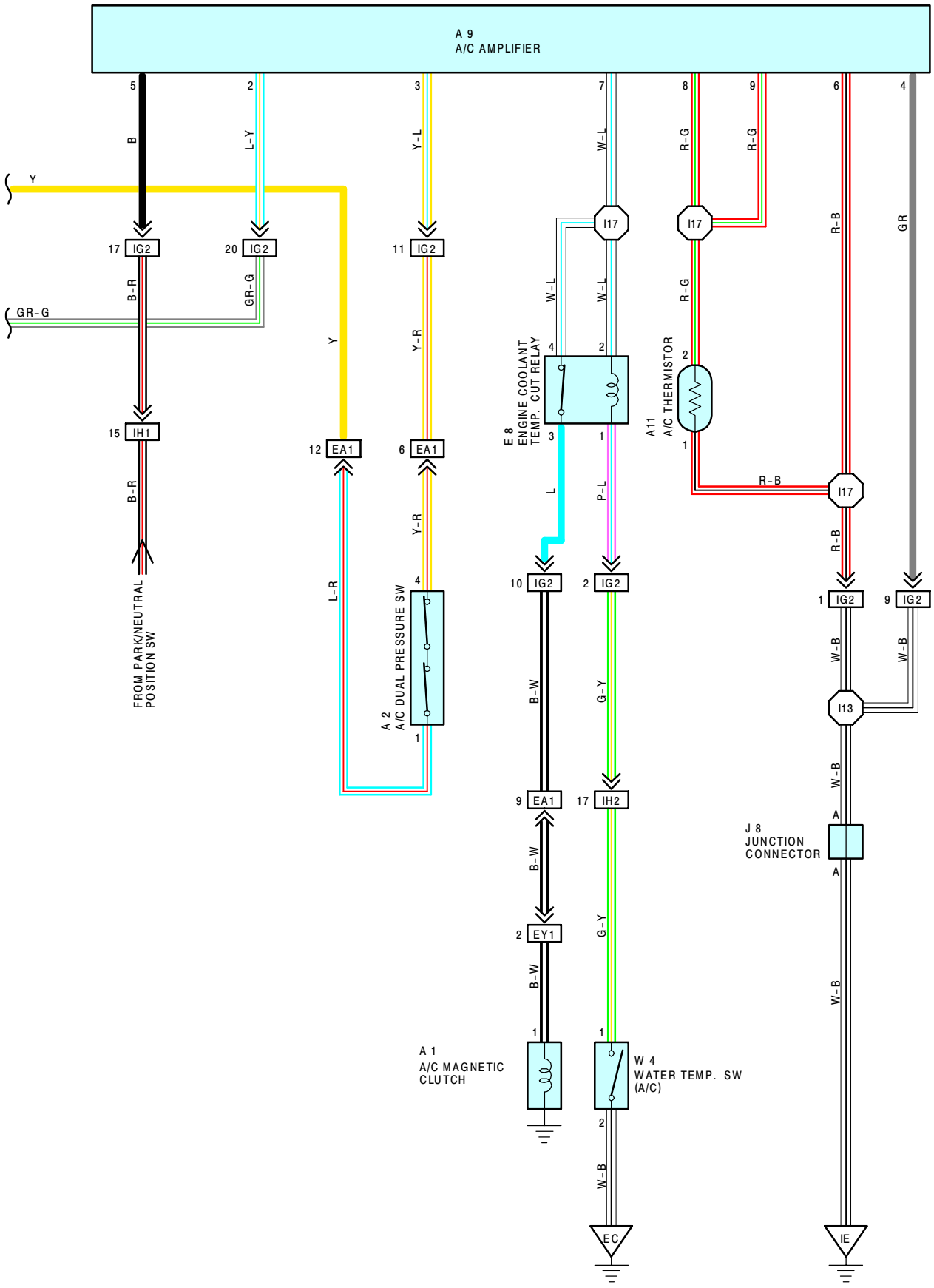
A 9
A/C AMPLIFIER
5
2
3
7
8
9
6
4
B
L-Y
Y-L
W-L
R-G
R-G
Y
GR-G
17 IG2
20 IG2
11 IG2
B-R
GR-G
Y
Y-R
15 IH1
12 EA1
6 EA1
B-R
Y-R
L-R
FROM PARK/NEUTRAL POSITION SW
A 2
A/C DUAL PRESSURE SW
4
1
I17
I17
W-L
W-L
R-G
R-B
GR
E 8
ENGINE COOLANT TEMP. CUT RELAY
4
2
3
1
A11
A/C THERMISTOR
2
1
R-B
I17
L
P-L
R-B
10 IG2
2 IG2
1 IG2
9 IG2
B-W
G-Y
W-B
W-B
I13
9 EA1
17 IH2
W-B
A
J 8
JUNCTION CONNECTOR
A
B-W
2 EY1
G-Y
B-W
W-B
1
1
A 1
A/C MAGNETIC CLUTCH
W 4
WATER TEMP. SW (A/C)
2
W-B
EC
IE

AIR CONDITIONING

SERVICE HINTS

A 1 A/C MAGNETIC CLUTCH
1-GROUND : APPROX. **3.8** Ω

A 2 A/C DUAL PRESSURE SW
1-4 : OPEN WITH THE REFRIGERANT PRESSURE AT LESS THAN APPROX. **2.1** KG/CM2 (**30** PSI, **206** KPA)
OR MORE THAN APPROX. **27** KG/CM2 (**38** PSI, **2684** KPA)

A11 A/C THERMISTOR
2-1 : APPROX. **1.5** KΩ **25**°C (**77**°F)

B 4 BLOWER RESISTOR
1-4 : **2.0** Ω
1-2 : **0.88** Ω
1-3 : **0.32** Ω

H10 (A), H11 (B) HEATER CONTROL SW AND A/C SW
(A) 1 **(A)** 9-GROUND : APPROX. **12** VOLTS WITH THE IGNITION SW AT **ON** POSITION
(A) 1-GROUND : APPROX. **12** VOLTS WITH THE HEATER CONTROL SW AT **LOW** POSITION
(B) 9-GROUND : APPROX. **12** VOLTS WITH THE HEATER CONTROL SW AT **MEDIUM LOW** POSITION
(B) 10-GROUND : APPROX. **12** VOLTS WITH THE HEATER CONTROL SW AT **MEDIUM HIGH** POSITION
(B) 13-GROUND : APPROX. **12** VOLTS WITH THE HEATER CONTROL SW AT **HIGH** POSITION
(A) 18-GROUND : APPROX. **12** VOLTS WITH THE RECIRC SW AT **ON** POSITION
(A) 19-GROUND : APPROX. **12** VOLTS WITH THE FRESH SW AT **ON** POSITION
(A) 14-GROUND : APPROX. **12** VOLTS WITH THE FACE SW AT **ON** POSITION
(A) 12-GROUND : APPROX. **12** VOLTS WITH THE B/L SW AT **ON** POSITION
(A) 7-GROUND : APPROX. **12** VOLTS WITH THE FOOT SW AT **ON** POSITION
(B) 4-GROUND : APPROX. **12** VOLTS WITH THE DEF SW AT **ON** POSITION
(B) 11-GROUND : APPROX. **12** VOLTS WITH THE FOOT/DEF SW AT **ON** POSITION
(A) 1, **(B)** 18-GROUND : APPROX. **12** VOLTS WITH THE A/C SW AT **ON** POSITION
(A) 8, **(B)** 16-GROUND : ALWAYS CONTINUITY

○ : PARTS LOCATION

CODE	SEE PAGE	CODE		SEE PAGE	CODE	SEE PAGE
A 1	22	**B 2**		24	**J 1**	25
A 2	22	**B 3**		24	**J 2**	25
A 9	24	**B 4**		24	**J 4**	25
A10	24	**B 5**		24	**J 7**	25
A11	24	**E 8**		24	**J 8**	25
A14	24	**F11**		25	**S 8**	25
A15	24	**H10**	A	25	**S 9**	25
A16	24	**H11**	B	25	**W 4**	23

⬭ : RELAY BLOCKS

CODE	SEE PAGE	RELAY BLOCKS (RELAY BLOCK LOCATION)
1	20	R/B NO. 1 (LEFT KICK PANEL)

▭ : CONNECTOR JOINING WIRE HARNESS AND WIRE HARNESS

CODE	SEE PAGE	JOINING WIRE HARNESS AND WIRE HARNESS (CONNECTOR LOCATION)
EA1	30	COWL WIRE AND ENGINE ROOM MAIN WIRE (LEFT FENDER)
EY1	30	OIL PRESSURE SWITCH WIRE AND ENGINE ROOM MAIN WIRE (NEAR THE AIR CLEANER)
IG1	32	COWL WIRE AND A/C SUB WIRE (BEHIND GLOVE BOX)
IG2		
IH1	32	ENGINE WIRE AND COWL WIRE (BEHIND GLOVE BOX)
IH2		

▽ : GROUND POINTS

CODE	SEE PAGE	GROUND POINTS LOCATION
EC	30	AIR INTAKE CHAMBER
ID	32	LEFT KICK PANEL
IE	32	RIGHT KICK PANEL

⯃ : SPLICE POINTS

CODE	SEE PAGE	WIRE HARNESS WITH SPLICE POINTS	CODE	SEE PAGE	WIRE HARNESS WITH SPLICE POINTS
I 3	32	COWL WIRE	**I13**	32	COWL WIRE
I 8			**I14**		
I11			**I17**	32	A/C SUB WIRE
I12					

A 1 GRAY

A 2 BLACK

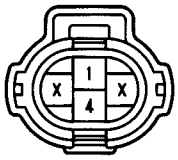

A 9

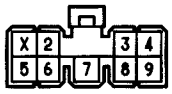

A10

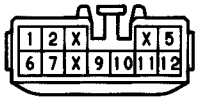

A11

A14

A15

A16

B 2

B 3 BLACK

B 4 BLACK

B 5 BLACK

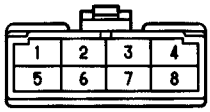

E 8 BLACK

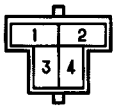

F11

(SEE PAGE 20)

H10 (A)

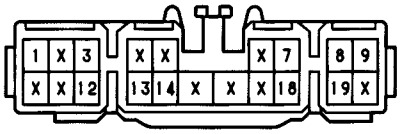

H11 (B) BLUE

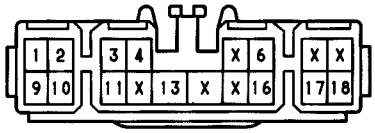

J 1

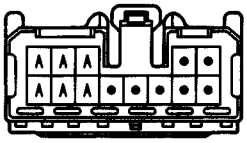

(HINT:SEE PAGE 7)

J 2 BLUE

(HINT:SEE PAGE 7)

J 4

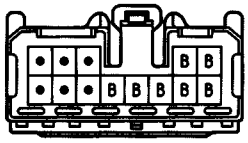

(HINT:SEE PAGE 7)

J 7 BLUE

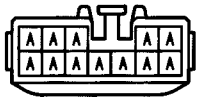

(HINT:SEE PAGE 7)

J 8 BLUE

(HINT:SEE PAGE 7)

S 8

S 9

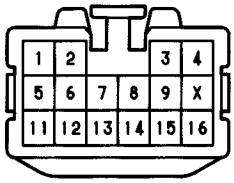

W 4 GRAY

J GROUND POINT

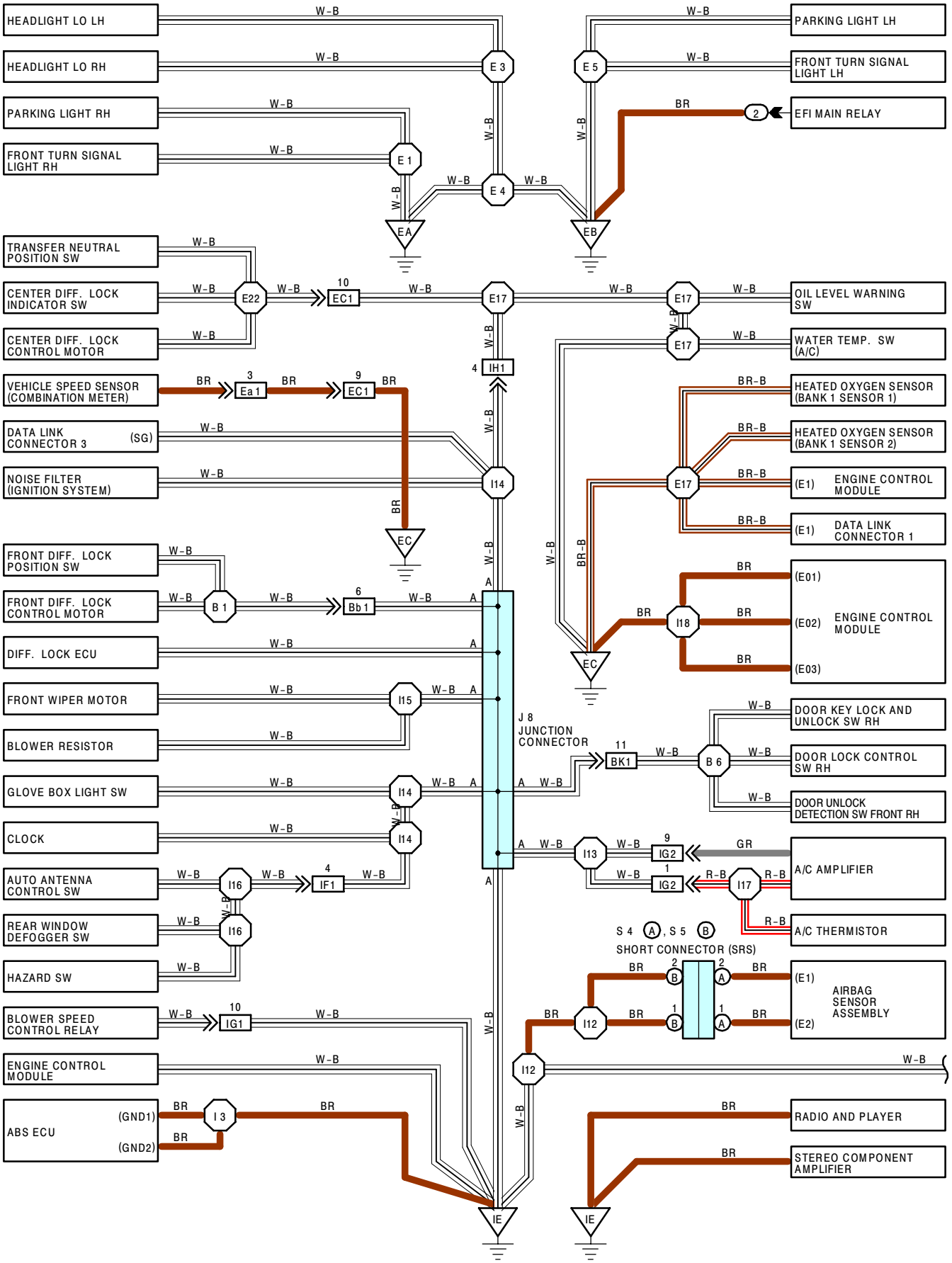

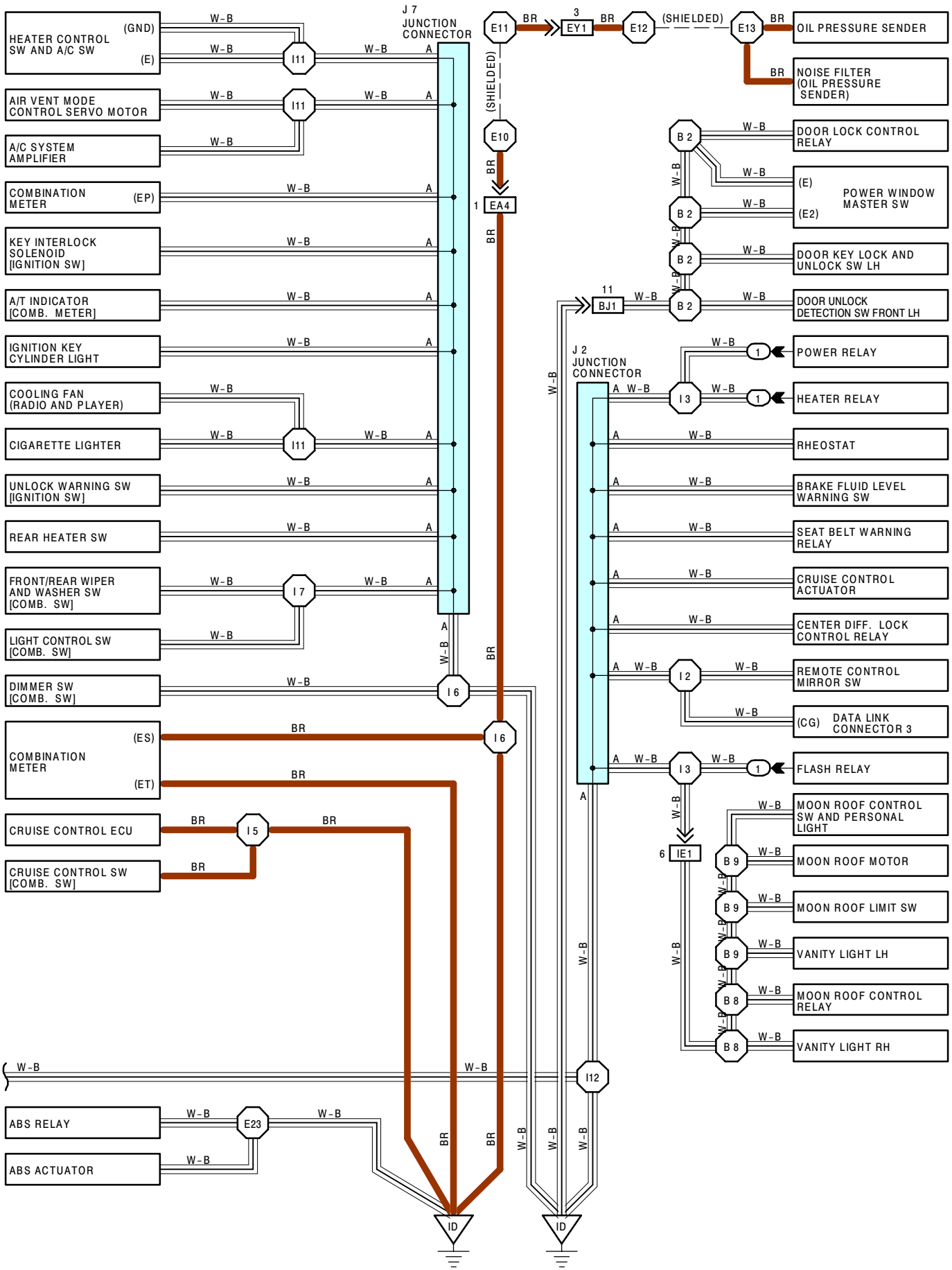
HEATER CONTROL SW AND A/C SW
(GND)
(E)
AIR VENT MODE CONTROL SERVO MOTOR
A/C SYSTEM AMPLIFIER
COMBINATION METER
(EP)
KEY INTERLOCK SOLENOID [IGNITION SW]
A/T INDICATOR [COMB. METER]
IGNITION KEY CYLINDER LIGHT
COOLING FAN (RADIO AND PLAYER)
CIGARETTE LIGHTER
UNLOCK WARNING SW [IGNITION SW]
REAR HEATER SW
FRONT/REAR WIPER AND WASHER SW [COMB. SW]
LIGHT CONTROL SW [COMB. SW]
DIMMER SW [COMB. SW]
COMBINATION METER
(ES)
(ET)
CRUISE CONTROL ECU
CRUISE CONTROL SW [COMB. SW]
ABS RELAY
ABS ACTUATOR
J 7 JUNCTION CONNECTOR
J 2 JUNCTION CONNECTOR
I11
I7
I6
I5
E23
E11
EY1
E12
E13
E10
EA4
BJ1
I3
I2
IE1
I12
OIL PRESSURE SENDER
NOISE FILTER (OIL PRESSURE SENDER)
DOOR LOCK CONTROL RELAY
POWER WINDOW MASTER SW
(E)
(E2)
DOOR KEY LOCK AND UNLOCK SW LH
DOOR UNLOCK DETECTION SW FRONT LH
POWER RELAY
HEATER RELAY
RHEOSTAT
BRAKE FLUID LEVEL WARNING SW
SEAT BELT WARNING RELAY
CRUISE CONTROL ACTUATOR
CENTER DIFF. LOCK CONTROL RELAY
REMOTE CONTROL MIRROR SW
(CG) DATA LINK CONNECTOR 3
FLASH RELAY
MOON ROOF CONTROL SW AND PERSONAL LIGHT
MOON ROOF MOTOR
MOON ROOF LIMIT SW
VANITY LIGHT LH
MOON ROOF CONTROL RELAY
VANITY LIGHT RH
(SHIELDED)
ID
W-B
BR

Brought to you by BirfMark

J GROUND POINT

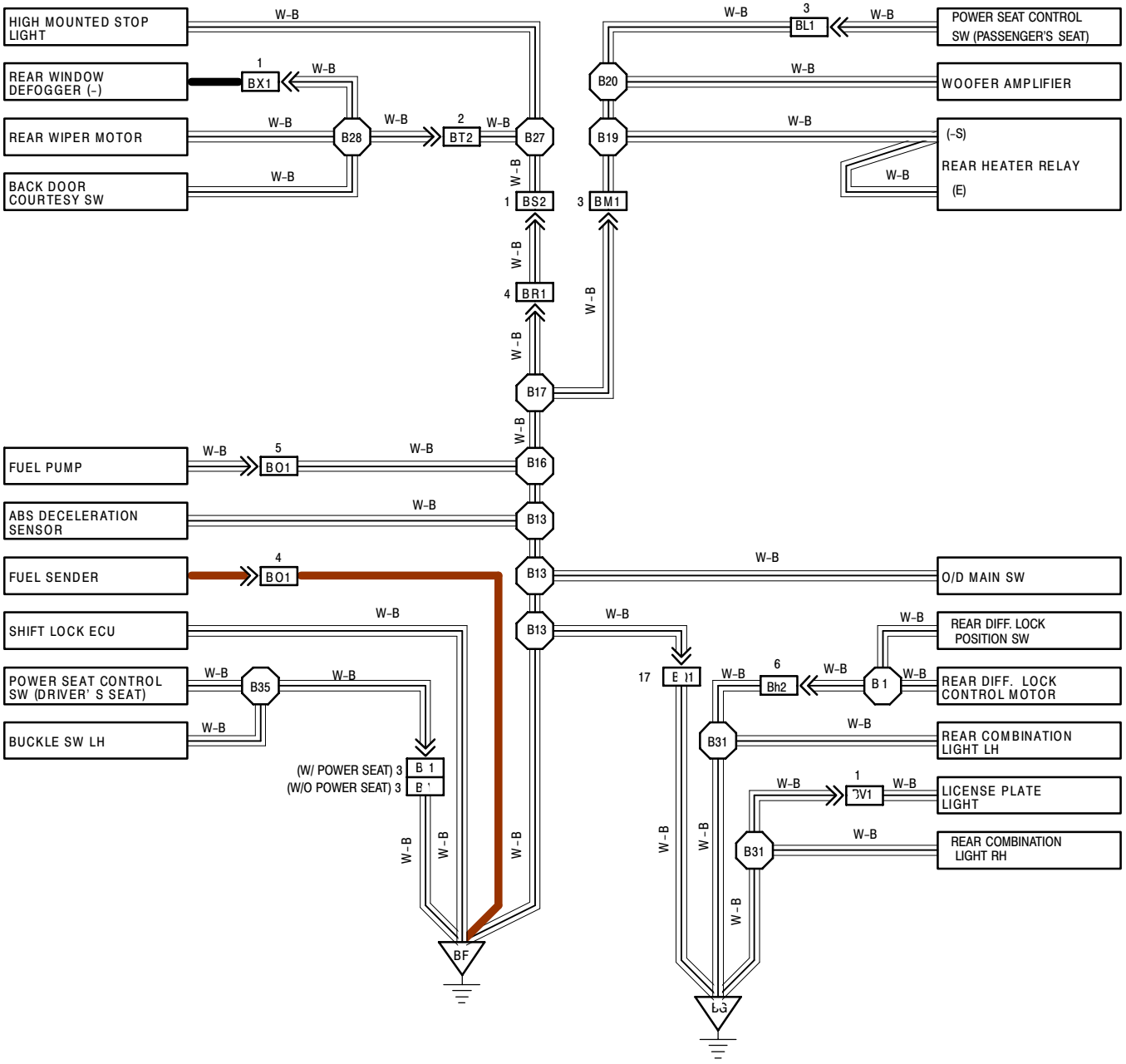

J 2 BLUE

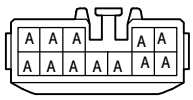

(HINT: SEE PAGE 7)

J 7 BLUE

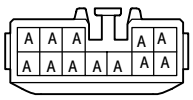

(HINT: SEE PAGE 7)

J 8 BLUE

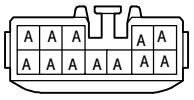

(HINT: SEE PAGE 7)

S 4 (A) YELLOW

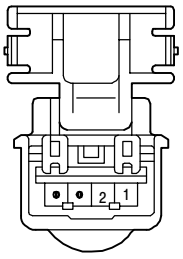

S 5 (5) YELLOW

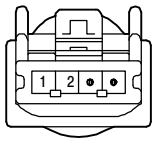

Brought to you by BirfMark

: PARTS LOCATION

CODE	SEE PAGE	CODE	SEE PAGE	CODE	SEE PAGE
J 2	25	**J 8**	25	**S 5** B	25
J 7	25	**S 4** A	25		

: RELAY BLOCKS

CODE	SEE PAGE	RELAY BLOCKS (RELAY BLOCK LOCATION)
1	20	R/B NO. 1 (LEFT KICK PANEL)
2	18	R/B NO. 2 (FRONT SIDE OF THE FENDER)

: CONNECTOR JOINING WIRE HARNESS AND WIRE HARNESS

CODE	SEE PAGE	JOINING WIRE HARNESS AND WIRE HARNESS (CONNECTOR LOCATION)
EA4	30	COWL WIRE AND ENGINE ROOM MAIN WIRE (RIGHT FENDER)
EC1	30	ENGINE WIRE AND TRANSMISSION WIRE (NEAR THE STARTER)
EY1	30	OIL PRESSURE SWITCH WIRE AND ENGINE ROOM MAIN WIRE (NEAR THE AIR CLEANER)
Ea1	30	TRANSMISSION WIRE AND SPEED SENSOR WIRE (NEAR THE TRANSMISSION)
IE1	32	ROOF WIRE AND COWL WIRE (LEFT KICK PANEL)
IF1	32	COWL WIRE AND INSTRUMENT PANEL WIRE (INSTRUMENT PANEL CENTER)
IG1	32	COWL WIRE AND A/C SUB WIRE (BEHIND GLOVE BOX)
IG2		
IH1	32	ENGINE WIRE AND COWL WIRE (BEHIND GLOVE BOX)
BJ1	34	FRONT DOOR LH WIRE AND COWL WIRE (LEFT KICK PANEL)
BK1	34	FRONT DOOR RH WIRE AND COWL WIRE (RIGHT KICK PANEL)
BM1	34	FLOOR NO. 2 WIRE AND FLOOR NO. 1 WIRE (UNDER THE CENTER CONSOLE)
BO1	34	FLOOR NO. 1 WIRE AND LUGGAGE ROOM NO. 2 WIRE (BESIDE THE FUEL TANK)
BQ1	34	FLOOR NO. 3 WIRE AND FLOOR NO. 1 WIRE (LEFT QUARTER PANEL INNER)
BR1	34	LUGGAGE ROOM NO. 1 WIRE AND FLOOR NO. 1 WIRE (LEFT QUARTER PANEL INNER)
BS2	34	BACK DOOR NO. 1 WIRE AND LUGGAGE ROOM NO. 1 WIRE (LEFT REAR SIDE OF ROOF)
BT2	36	BACK DOOR NO. 1 WIRE AND BACK DOOR NO. 2 WIRE (BACK DOOR LEFT)
BV1	36	LUGGAGE ROOM NO. 3 WIRE AND FLOOR NO. 3 WIRE (UNDER THE LOWER BACK PANEL)
BX1	36	REAR WINDOW NO. 1 WIRE AND BACK DOOR NO. 2 WIRE (BACK DOOR RIGHT)
Bb1	36	COWL WIRE AND FRAME WIRE (RIGHT FENDER)
Bc1	38	FLOOR NO. 1 WIRE AND SEAT NO. 1 WIRE (UNDER THE DRIVER'S SEAT)
Bh2	36	FLOOR NO. 3 WIRE AND FRAME NO. 2 WIRE (LEFT QUARTER PANEL INNER)
Bj1	38	FLOOR NO. 2 WIRE AND SEAT NO. 1 WIRE (UNDER THE PASSENGER'S SEAT)

: GROUND POINTS

CODE	SEE PAGE	GROUND POINTS LOCATION
EA	30	FRONT SIDE OF RIGHT FENDER
EB	30	FRONT SIDE OF LEFT FENDER
EC	30	AIR INTAKE CHAMBER
ID	32	LEFT KICK PANEL
IE	32	RIGHT KICK PANEL
BF	34	UNDER THE CENTER CONSOLE BOX
BG	34	LOWER BACK PANEL CENTER

: SPLICE POINTS

CODE	SEE PAGE	WIRE HARNESS WITH SPLICE POINTS	CODE	SEE PAGE	WIRE HARNESS WITH SPLICE POINTS
E 1	30	ENGINE ROOM MAIN WIRE	**I14**	32	COWL WIRE
E 3			**I15**		
E 4			**I16**	32	INSTRUMENT PANEL WIRE
E 5			**I17**	32	A/C SUB WIRE
E10			**I18**	32	ENGINE WIRE
E11			**B 1**	36	FRAME WIRE
E12	30	OIL PRESSURE SWITCH WIRE	**B 2**	36	FRONT DOOR LH WIRE
E13			**B 6**	36	FRONT DOOR RH WIRE
E17	30	ENGINE WIRE	**B 8**	36	ROOF WIRE
E22	30	TRANSMISSION WIRE	**B 9**		
E23	30	COWL WIRE	**B13**	36	FLOOR WIRE
I 2	32		**B16**		
I 3			**B17**		
I 5			**B19**	36	FLOOR NO. 2 WIRE
I 6			**B20**		
I 7			**B27**	36	BACK DOOR NO. 1 WIRE
I11			**B28**	36	BACK DOOR NO. 2 WIRE
I12			**B31**	36	FLOOR NO. 3 WIRE
I13			**B35**	38	SEAT NO. 1 WIRE

K OVERALL ELECTRICAL WIRING DIAGRAM

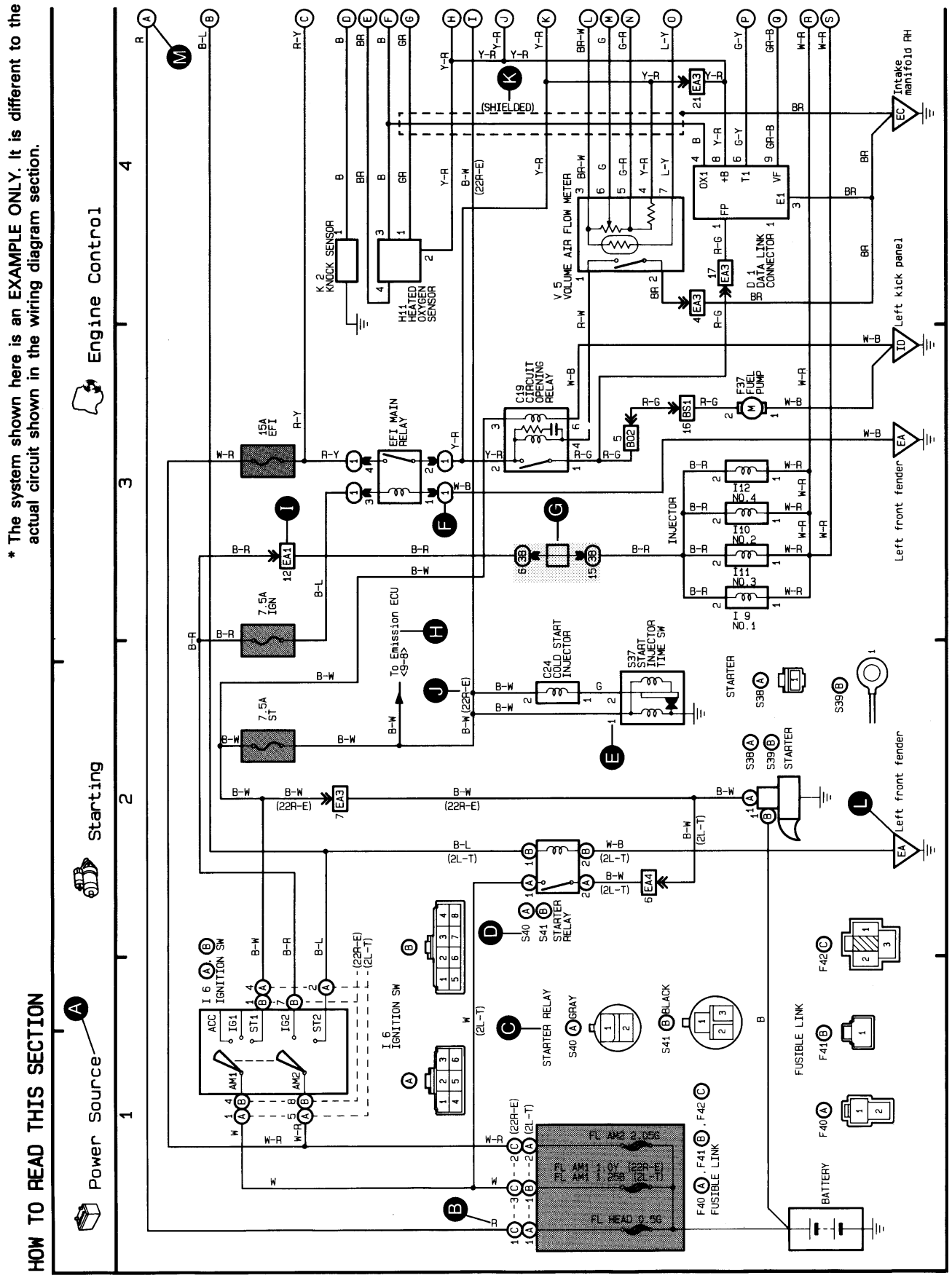

Ⓐ: System Title

Ⓑ: Indicates the wiring color.

Wire colors are indicated by an alphabetical code.

B	= Black	L	= Blue	R	= Red
BR	= Brown	LG	= Light Green	V	= Violet
G	= Green	O	= Orange	W	= White
GR	= Gray	P	= Pink	Y	= Yellow

The first letter indicates the basic wire color and the second letter indicates the color of the stripe.

Example: L – Y

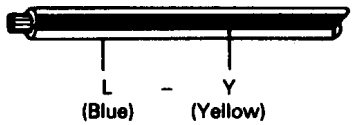

Ⓒ: Indicates the connector to be connected to a part (the numeral indicates the pin No.)

Ⓓ: The position of the parts is the same as shown in the wiring diagram and wire routing.

Ⓔ: Indicates the pin number of the connector. The numbering system is different for female and male connectors.

Example: Numbered in order from upper left to lower right / Numbered in order from upper right to lower left

The numbering system for the overall wiring diagram is the same as above.

Ⓕ: Indicates a Relay Block. No shading is used and only the Relay Block No. is shown to distinguish it from the J/B.

Example: ① Indicates Relay Block No. 1.

Ⓖ: Junction Block (The number in the circle is the J/B No. and the connector code is shown beside it). Junction Blocks are shaded to clearly separate them from other parts (different junction blocks are shaded differently for further clarification).

Example:

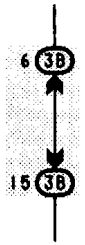

3B indicates that it is inside Junction Block No. 3.

Ⓗ: Indicates related system.

Ⓘ: Indicates the wiring harness and wiring harness connector. The wiring harness with male terminal is shown with arrows (⩔). Outside numerals are pin numbers.

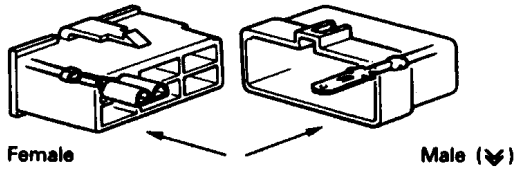

Ⓙ: ( ) is used to indicate different wiring and connector, etc. when the vehicle model, engine type, or specification is different.

Ⓚ: Indicates a shielded cable.

Ⓛ: Indicates and located on ground point.

Ⓜ: The same code occuring on the next page indicates that the wire harness is continuous.

Brought to you by BirfMark

Brought to you by BirfMark

SYSTEM INDEX

1997 Model (Location No. 1 to 23)

SYSTEMS	LOCATION
ABS	10-3
Auto Antenna	17-4
Air Conditioning	23-3
Back-Up Light	9-8
Center Differential Lock	20-3
Charging	1-3
Cigarette Lighter	16-3
Clock	16-4
Combination Meter	22-3
Cruise Control	11-3
Door Lock Control	14-3
Electronically Controlled Transmission and A/T Indicator	9-3
Engine Control	2-3
Front/Rear Differential Lock	21-3
Front Wiper and Washer	8-2
Headlight	3-4
Horn	15-4
Ignition	1-2
Illumination	5-3
Interior Light	6-3
Light Auto Turn Off	3-3
Moon Roof	15-2
Power Seat	12-3
Power Source	1~23-1
Power Window	13-3
Radio and Player	19-3
Rear Heater	16-2
Rear Wiper and Washer	8-3
Rear Window Defogger	18-2
Remote Control Mirror	18-3
Shift Lock	3-2
SRS	4-3
Starting	1-1
Stop Light	17-3
Taillight	4-2
Turn Signal and Hazard Warning Light	7-3
Unlock and Seat Belt Warning	17-2

Brought to you by BirfMark

Brought to you by BirfMark

Brought to you by BirfMark

1 LAND CRUISER STATION WAGON ELECTRICAL WIRING DIAGRAM

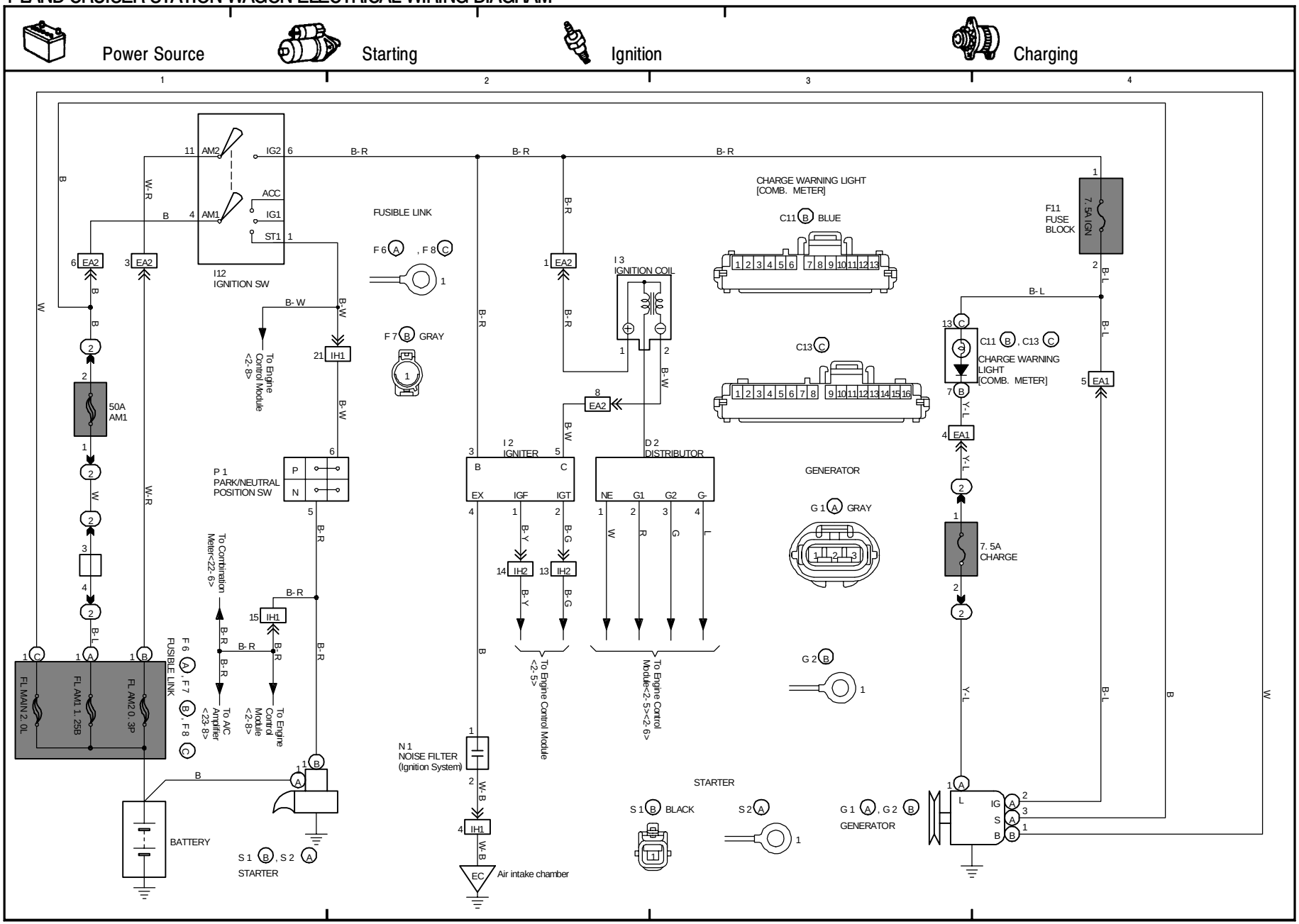

K

Brought to you by BirfMark

Brought to you by BirfMark

2 LAND CRUISER STATION WAGON

(Cont. next page)

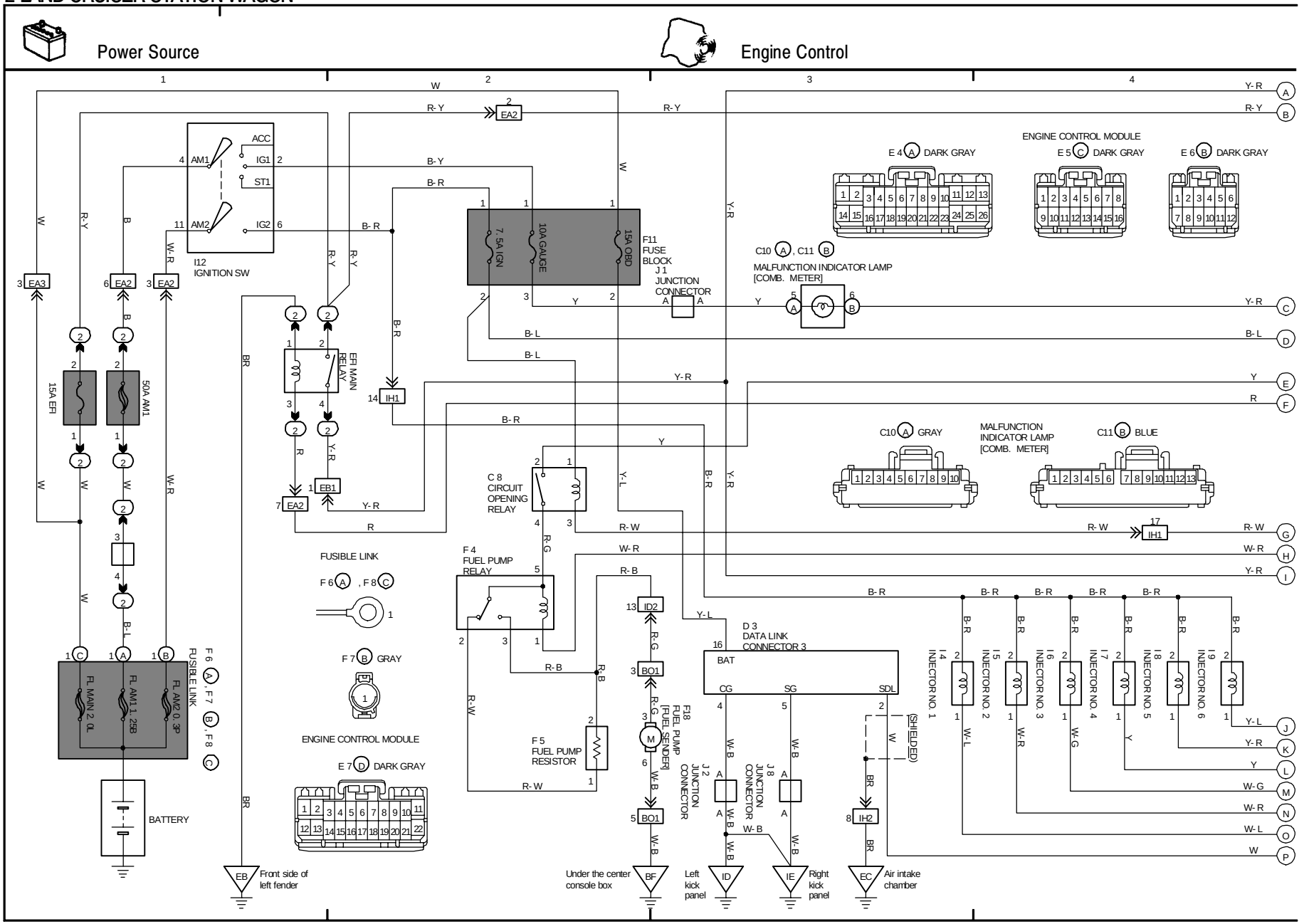

Brought to you by BirfMark

Brought to you by BirfMark

2 LAND CRUISER STATION WAGON(Cont' d)

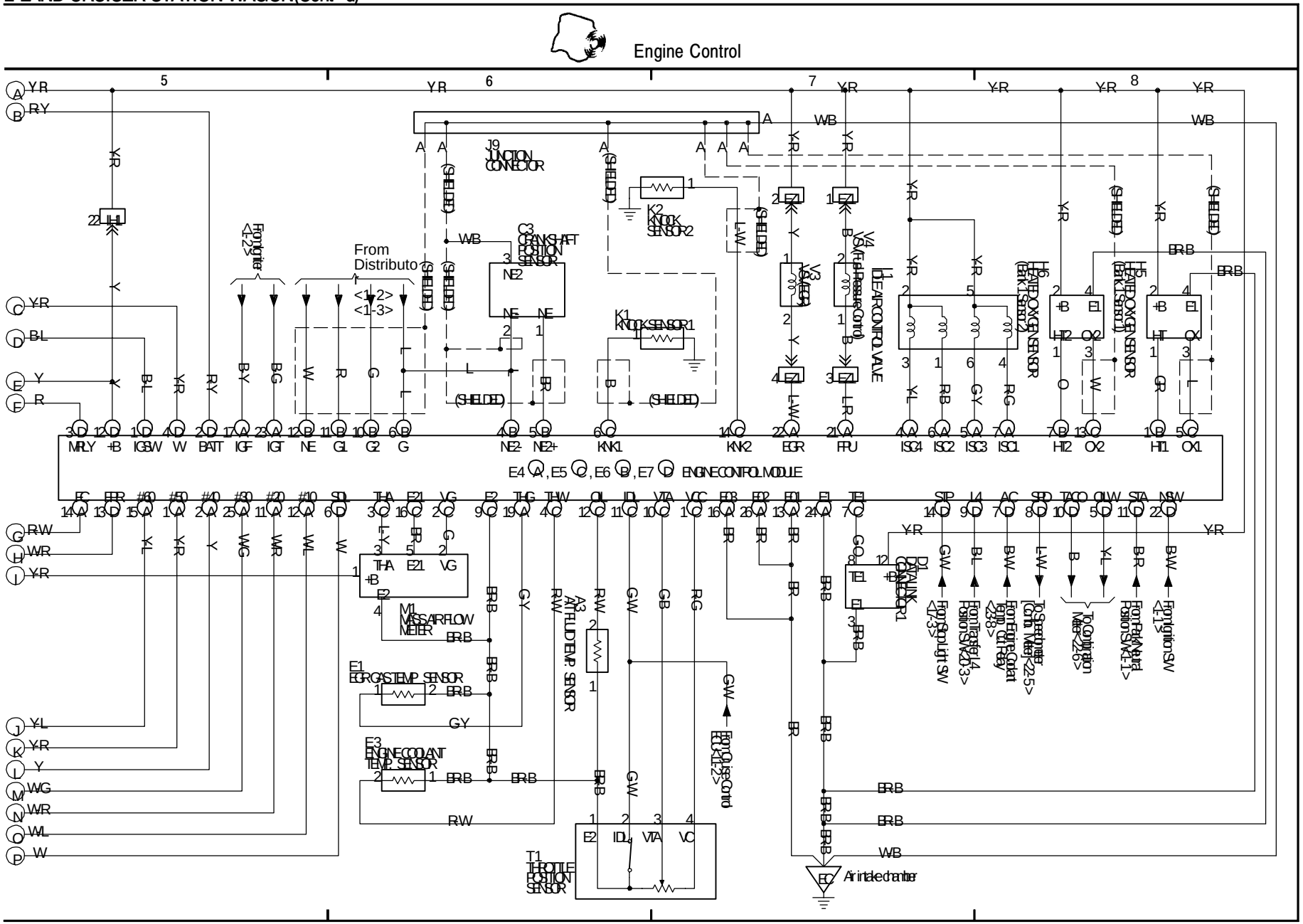

Brought to you by BirfMark

Brought to you by BirfMark

3 LAND CRUISER STATION WAGON

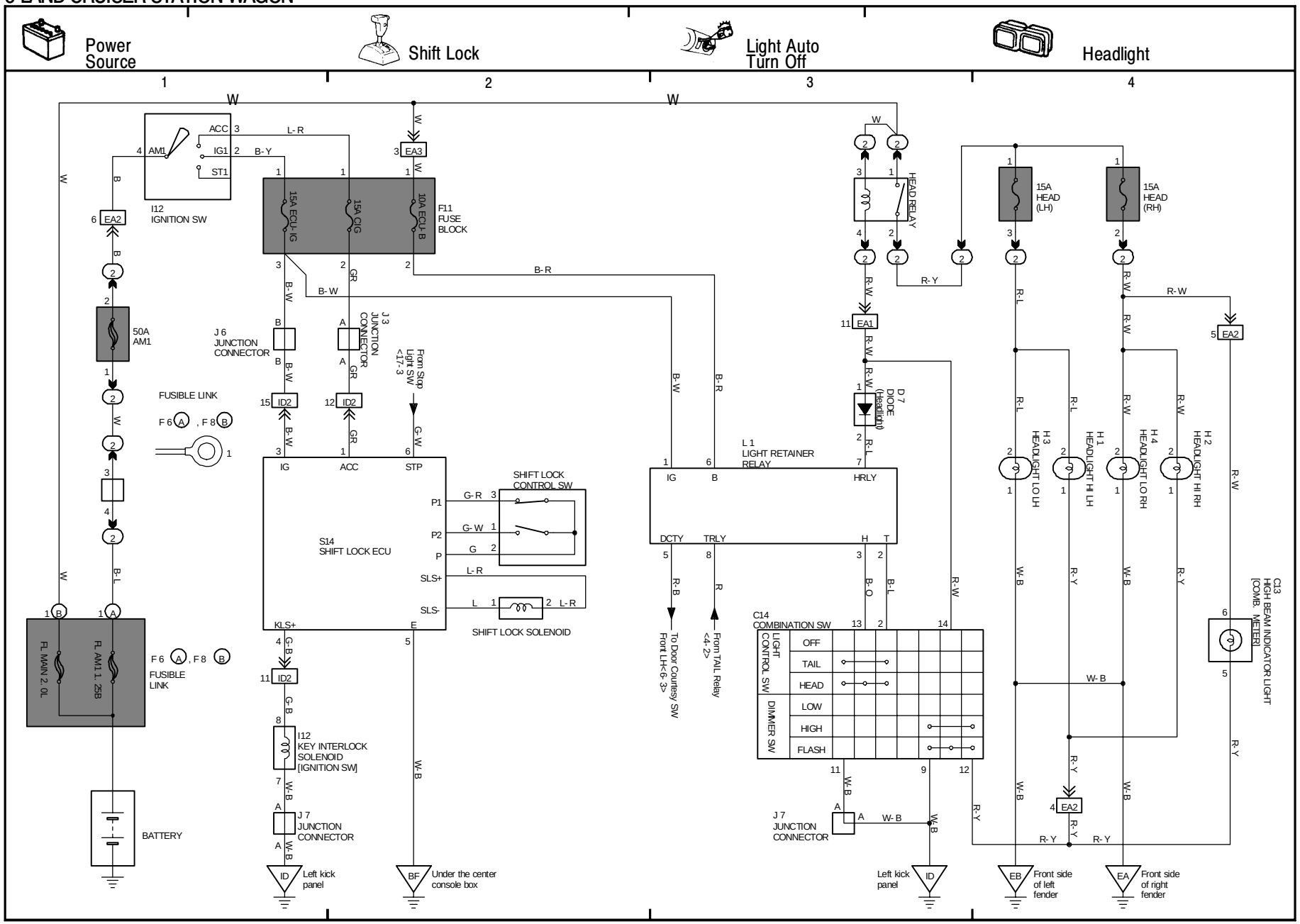

Brought to you by BirfMark

Brought to you by BirfMark

4 LAND CRUISER STATION WAGON

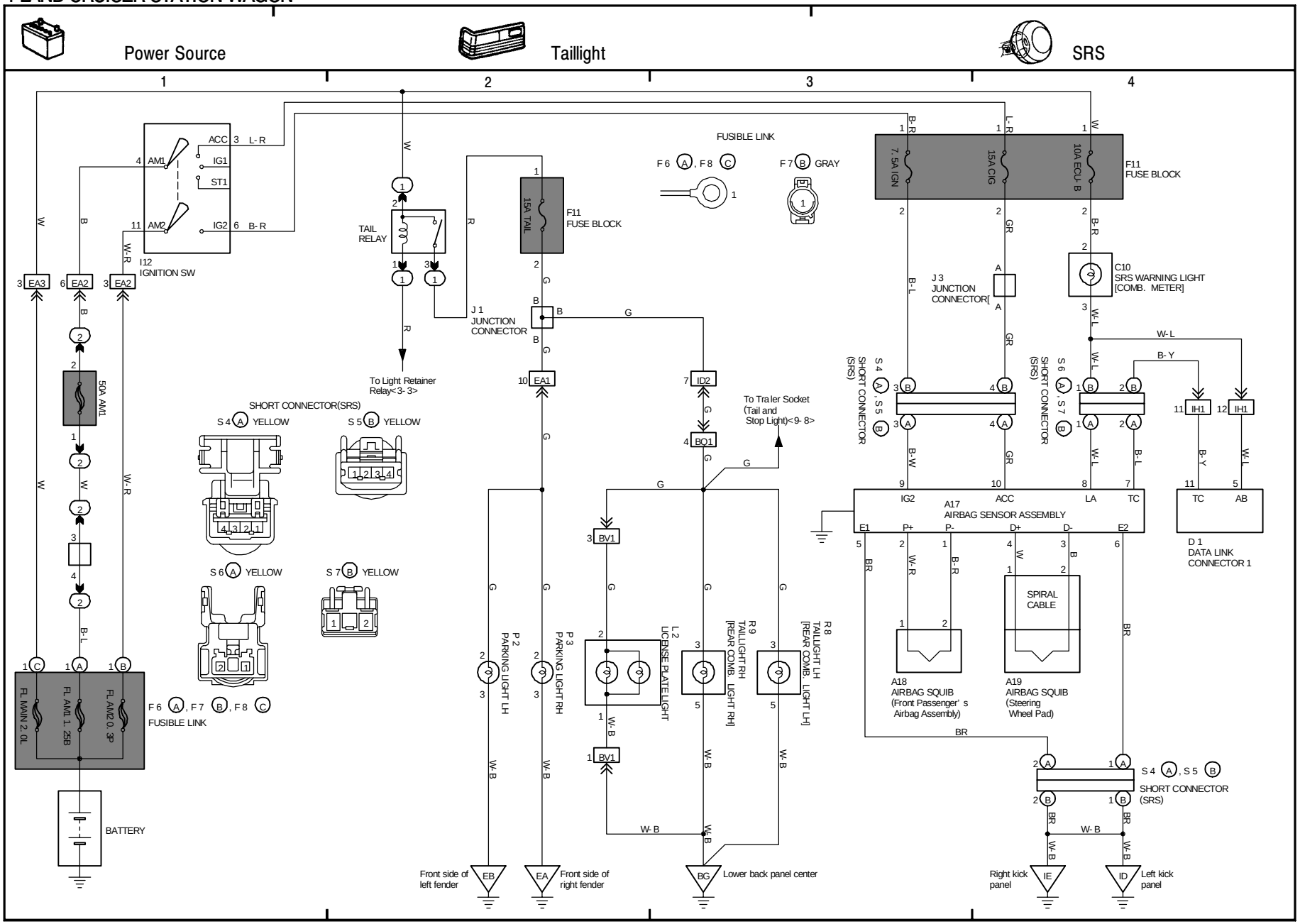

Brought to you by BirfMark

Brought to you by BirfMark

5 LAND CRUISER STATION WAGON

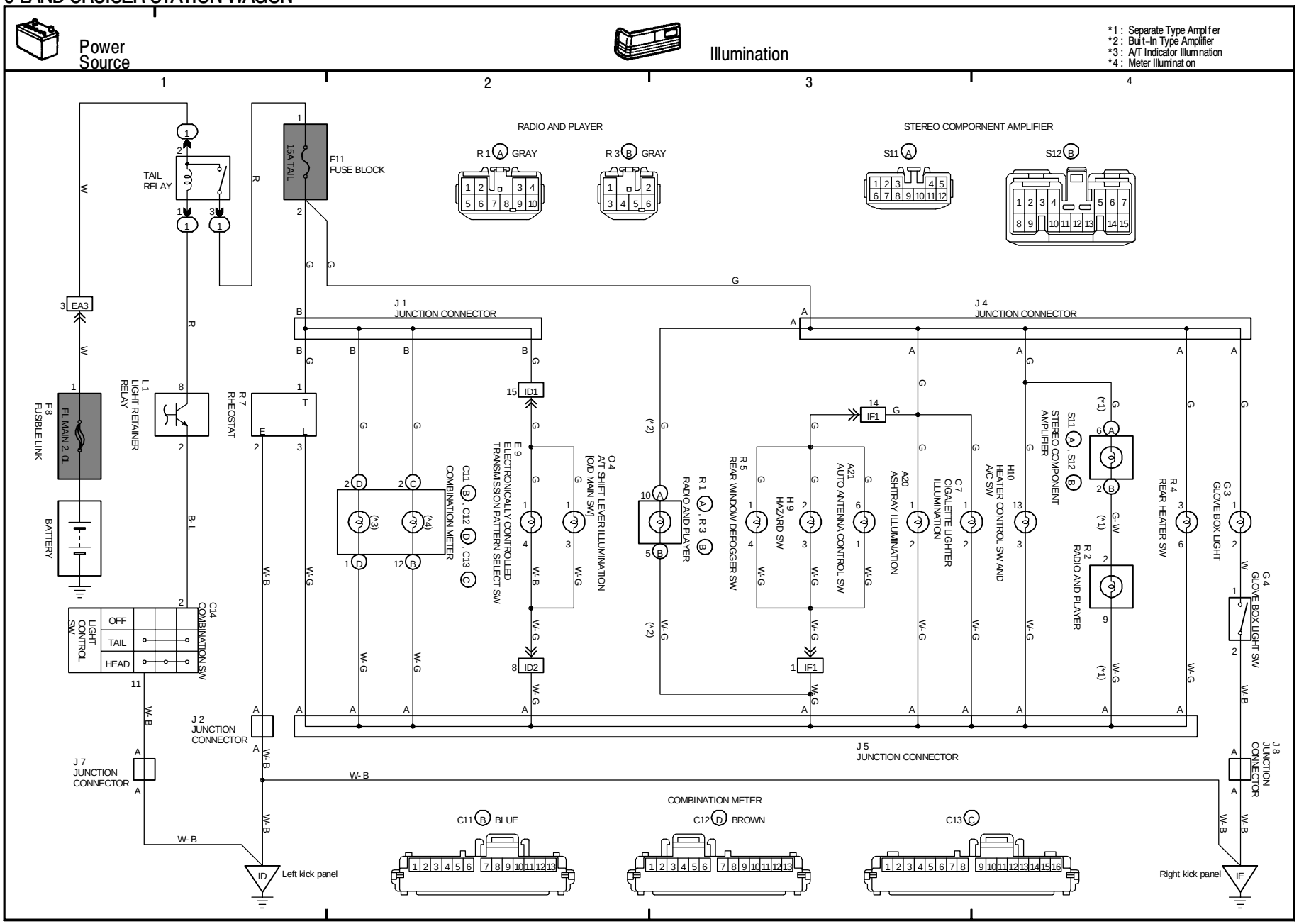

Brought to you by BirfMark

Brought to you by BirfMark

6 LAND CRUISER STATION WAGON

Power Source

Interior Light

*1 : w/ Moon Roof
*2 : w/o Moon Roof

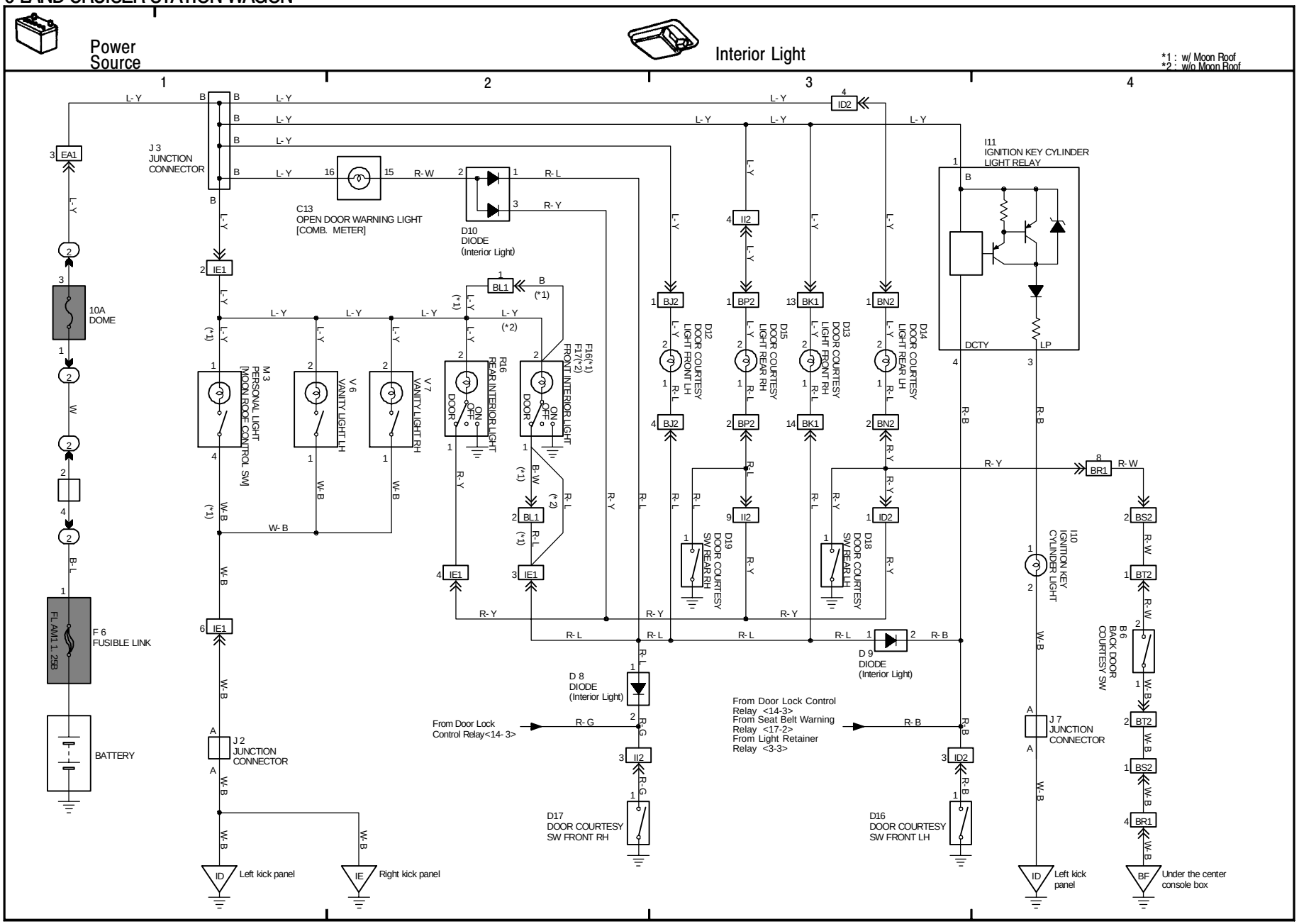

K

Brought to you by BirfMark

Brought to you by BirfMark

7 LAND CRUISER STATION WAGON

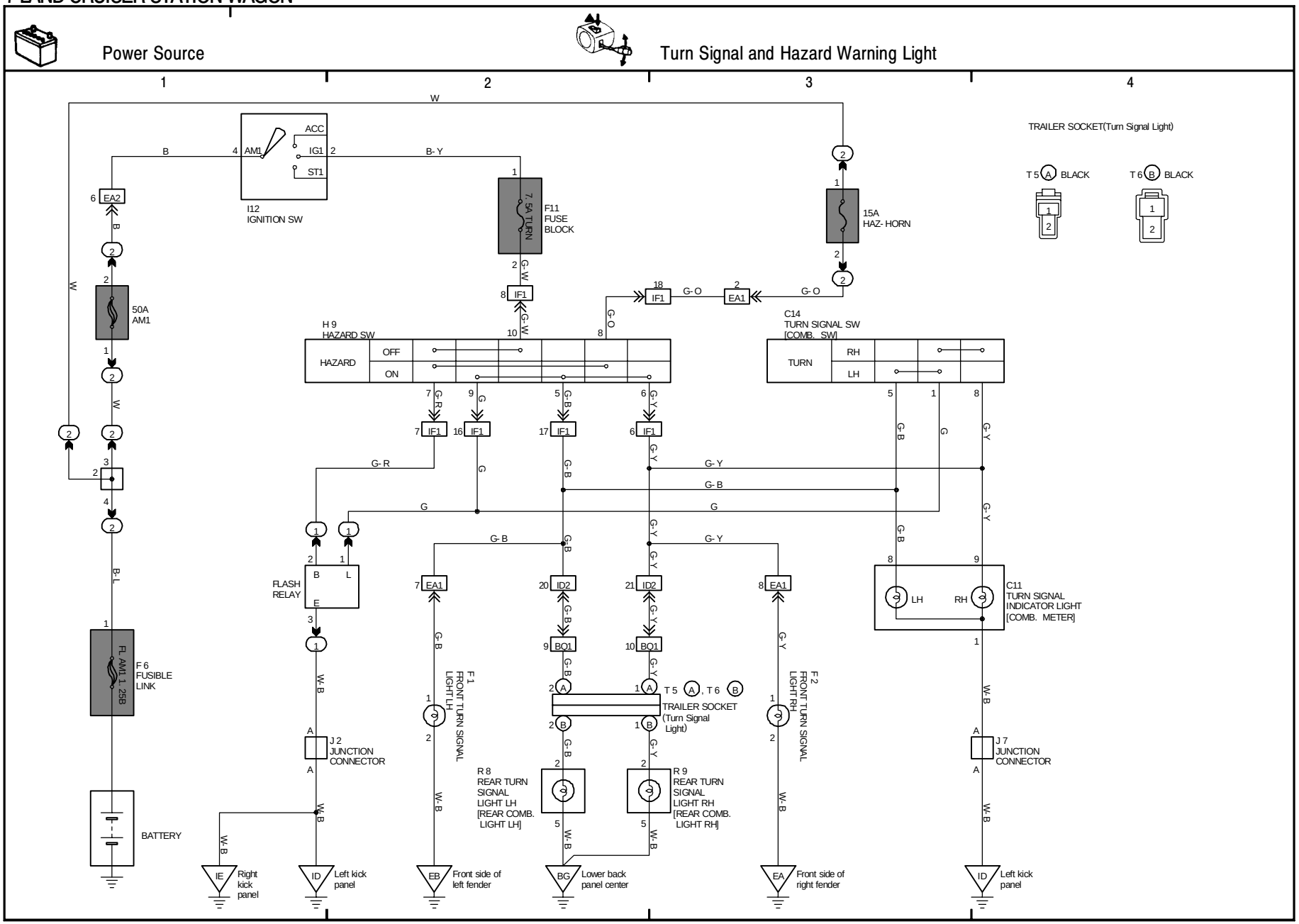

Brought to you by BirfMark

Brought to you by BirfMark

8 LAND CRUISER STATION WAGON

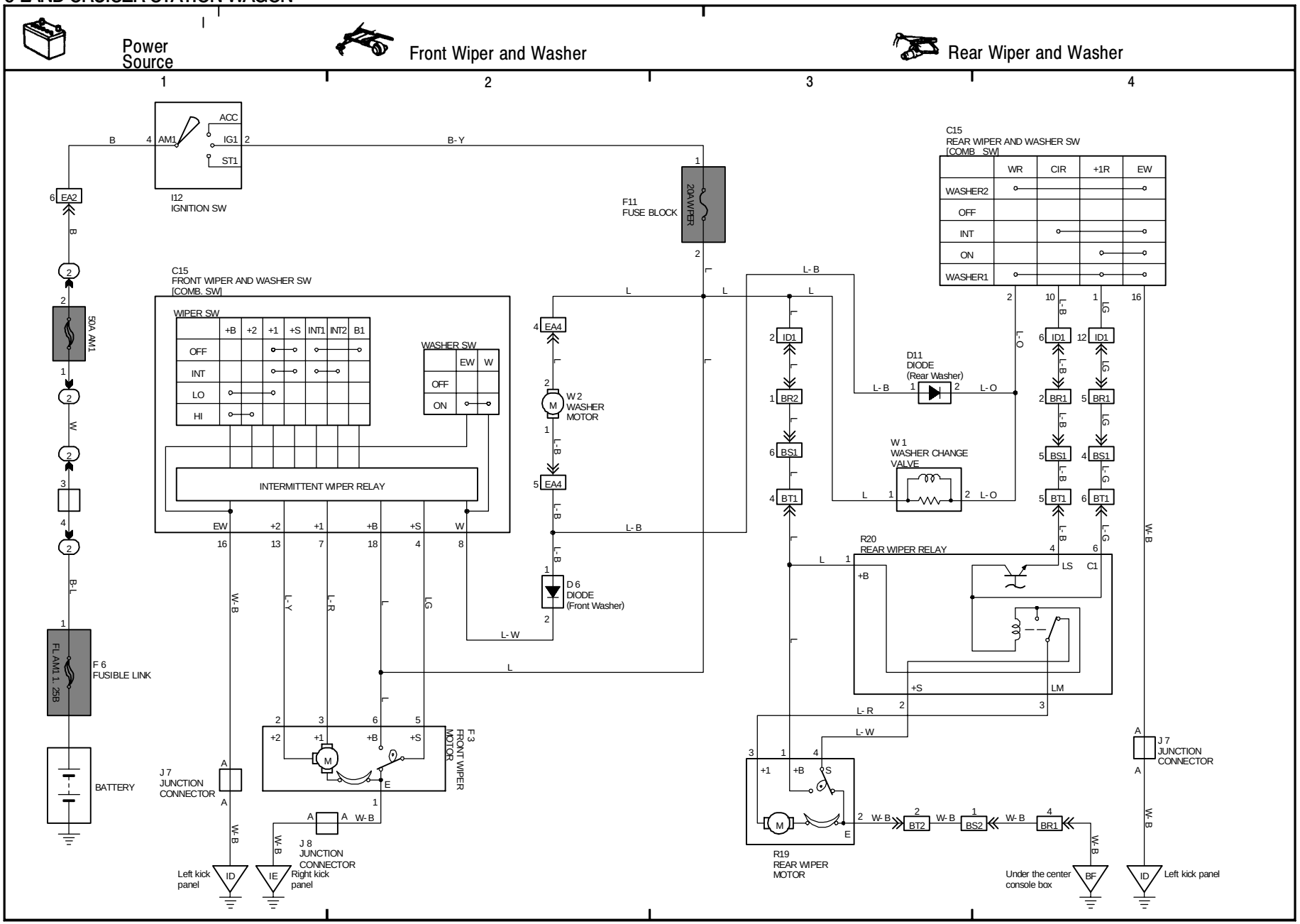

Brought to you by BirfMark

Brought to you by BirfMark

(Cont. next page)

Power Source

ECT

Electronically Controlled Transmission and A/T Indicator

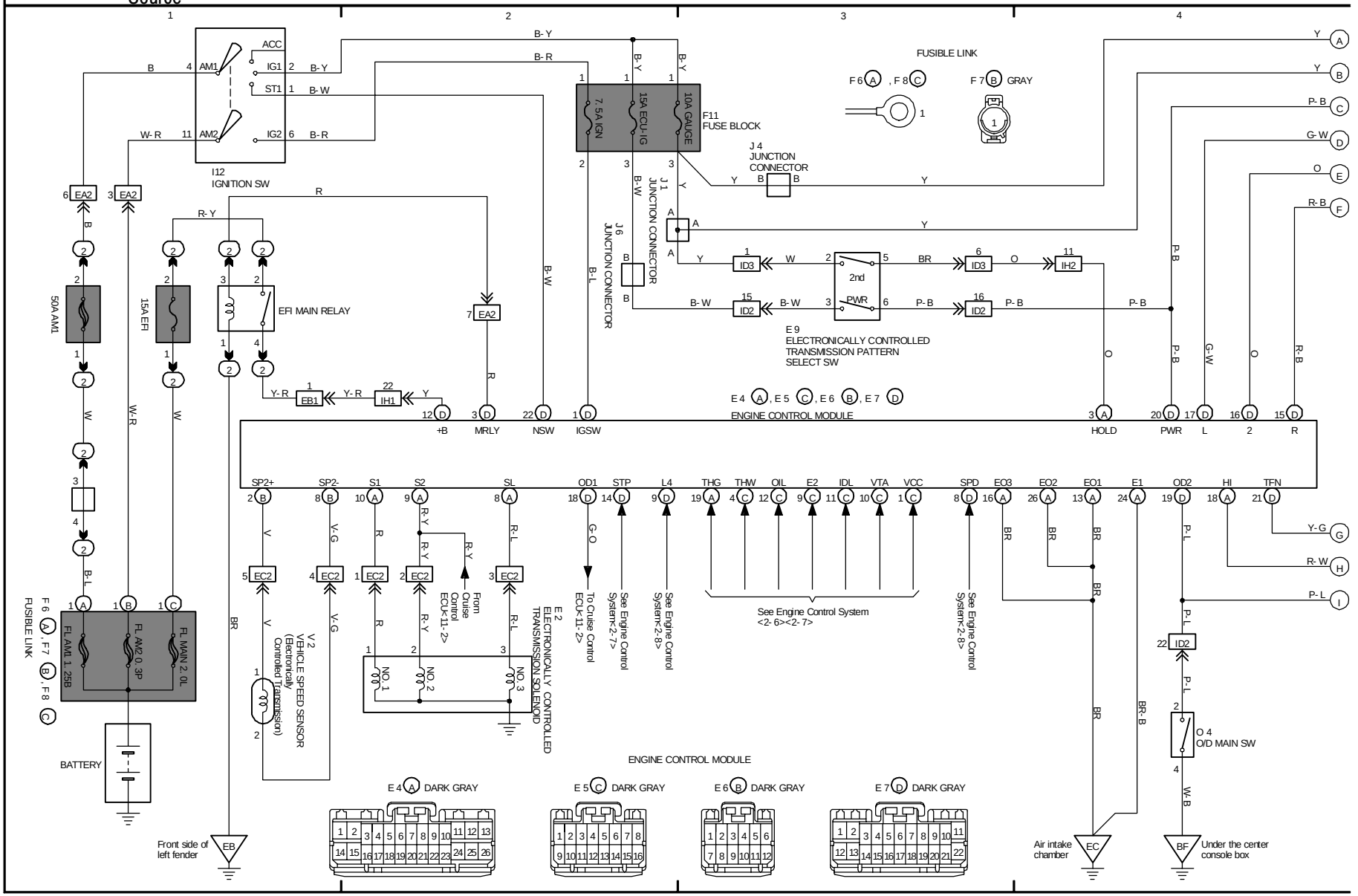

Brought to you by BirfMark

Brought to you by BirfMark

9 LAND CRUISER STATION WAGON(Cont' d)

ECT

Electronically Controlled Transmission and A/T Indicator

Back-Up Light

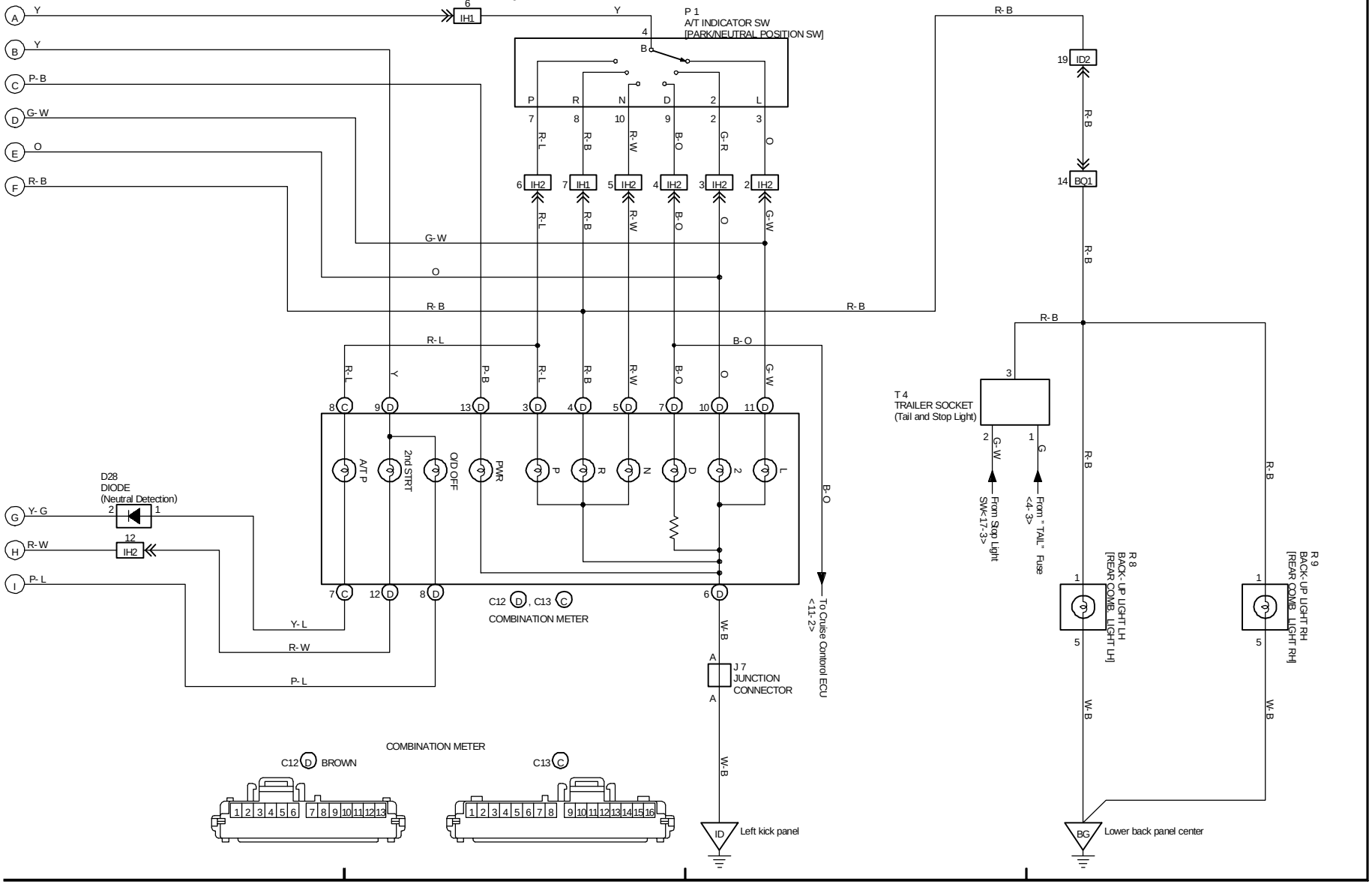

K

Brought to you by BirfMark

Brought to you by BirfMark

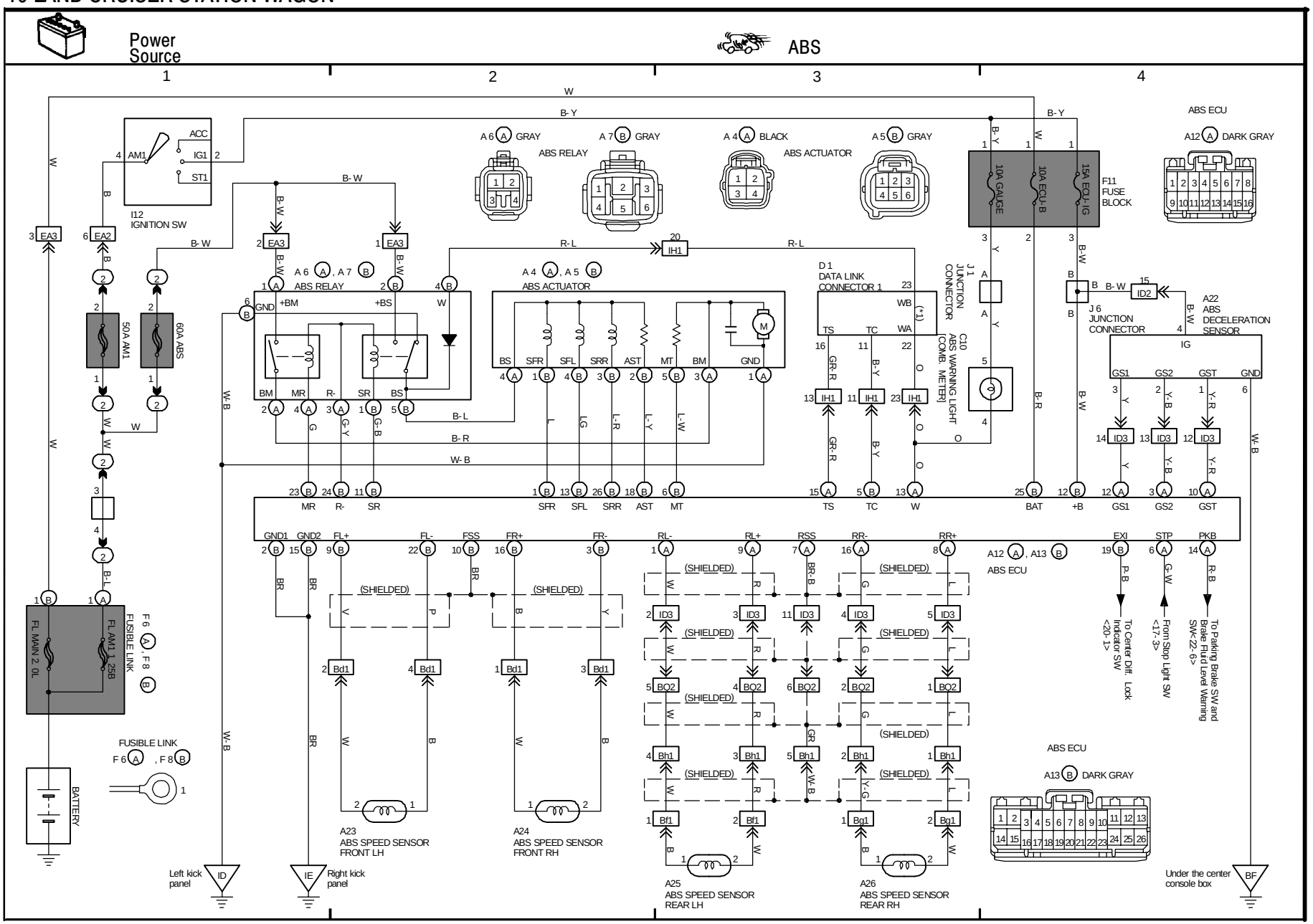

Brought to you by BirfMark

Brought to you by BirfMark

11 LAND CRUISER STATION WAGON

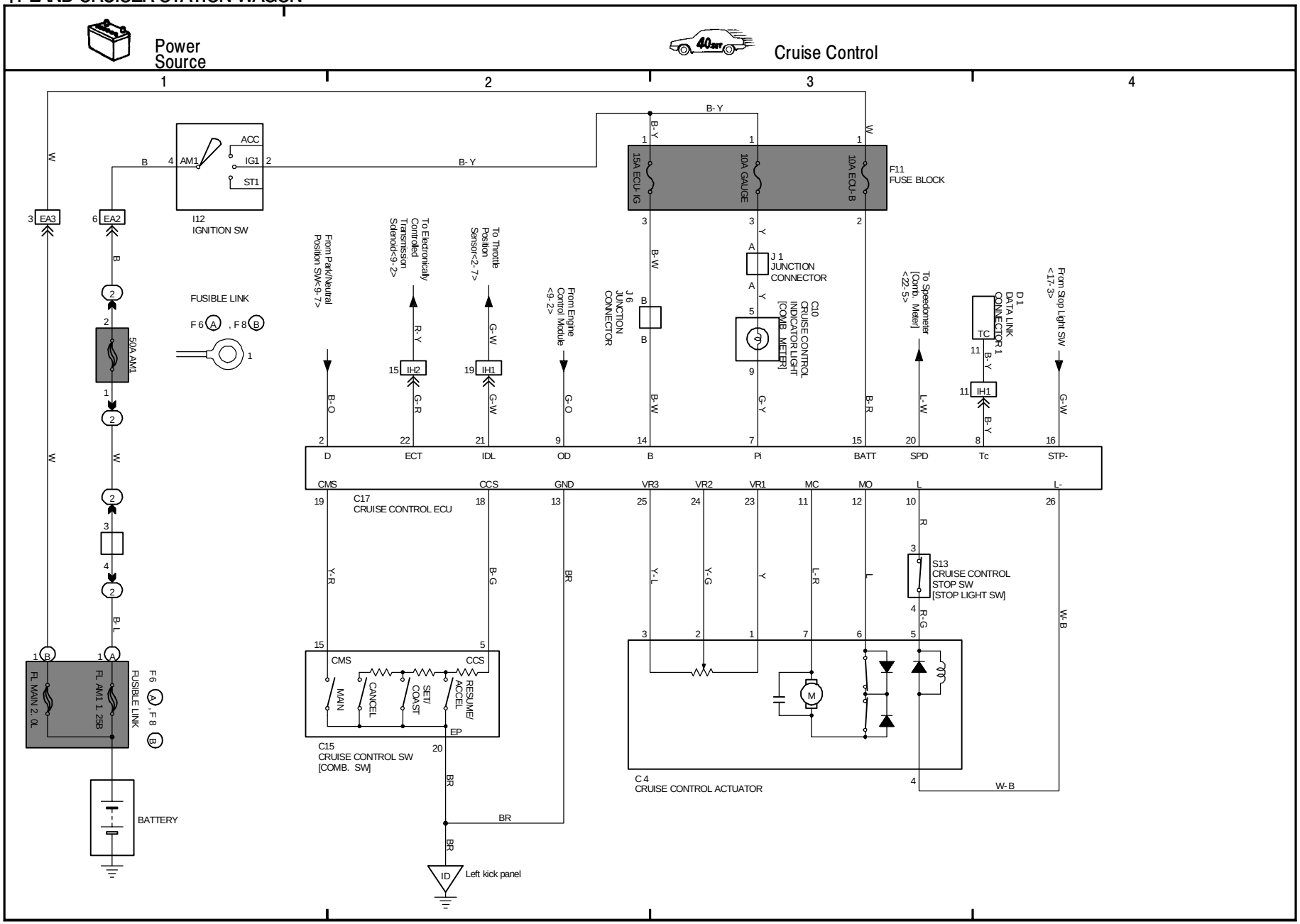

K

Brought to you by BirfMark

Brought to you by BirfMark

12 LAND CRUISER STATION WAGON

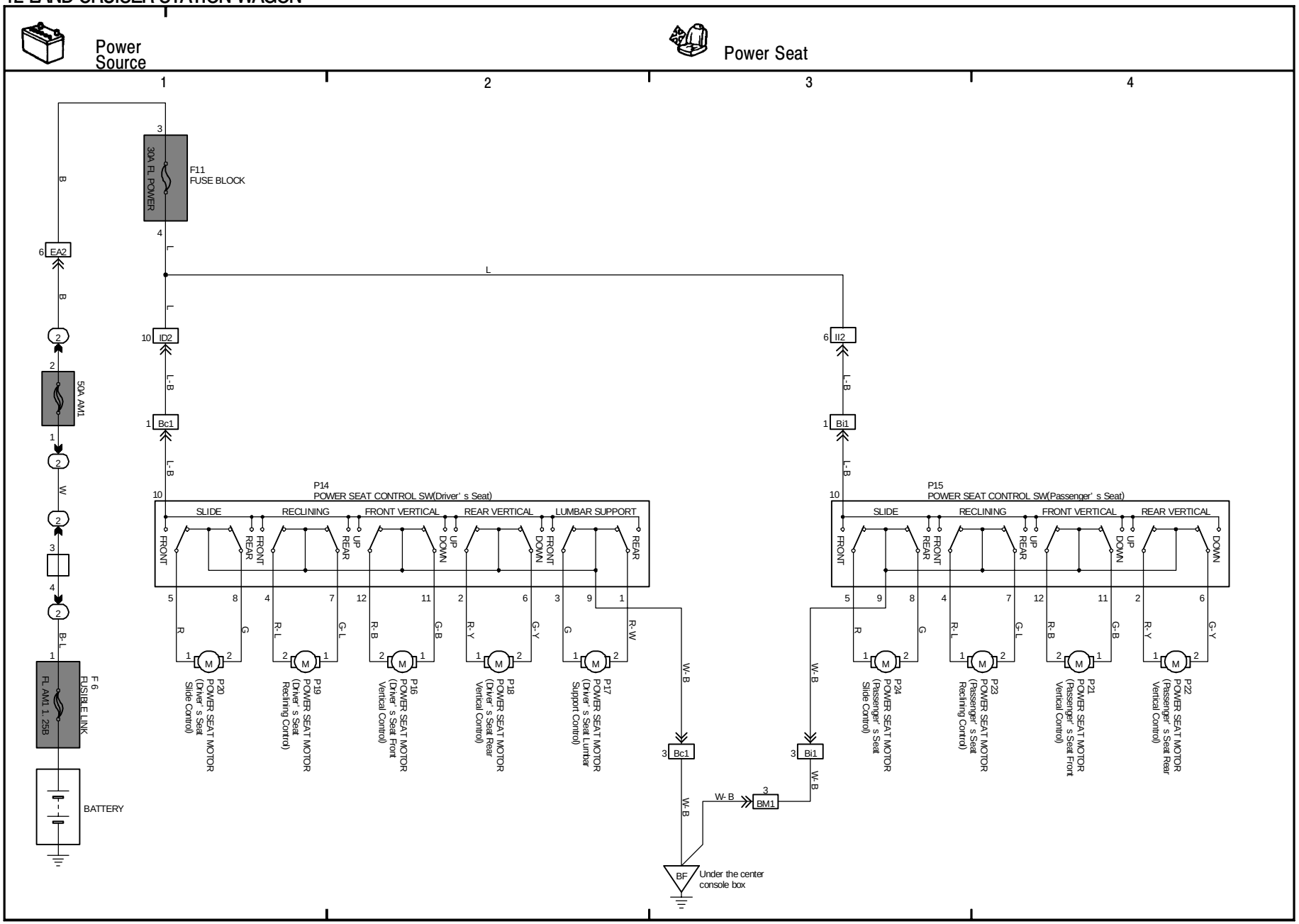

Brought to you by BirfMark

Brought to you by BirfMark

13 LAND CRUISER STATION WAGON

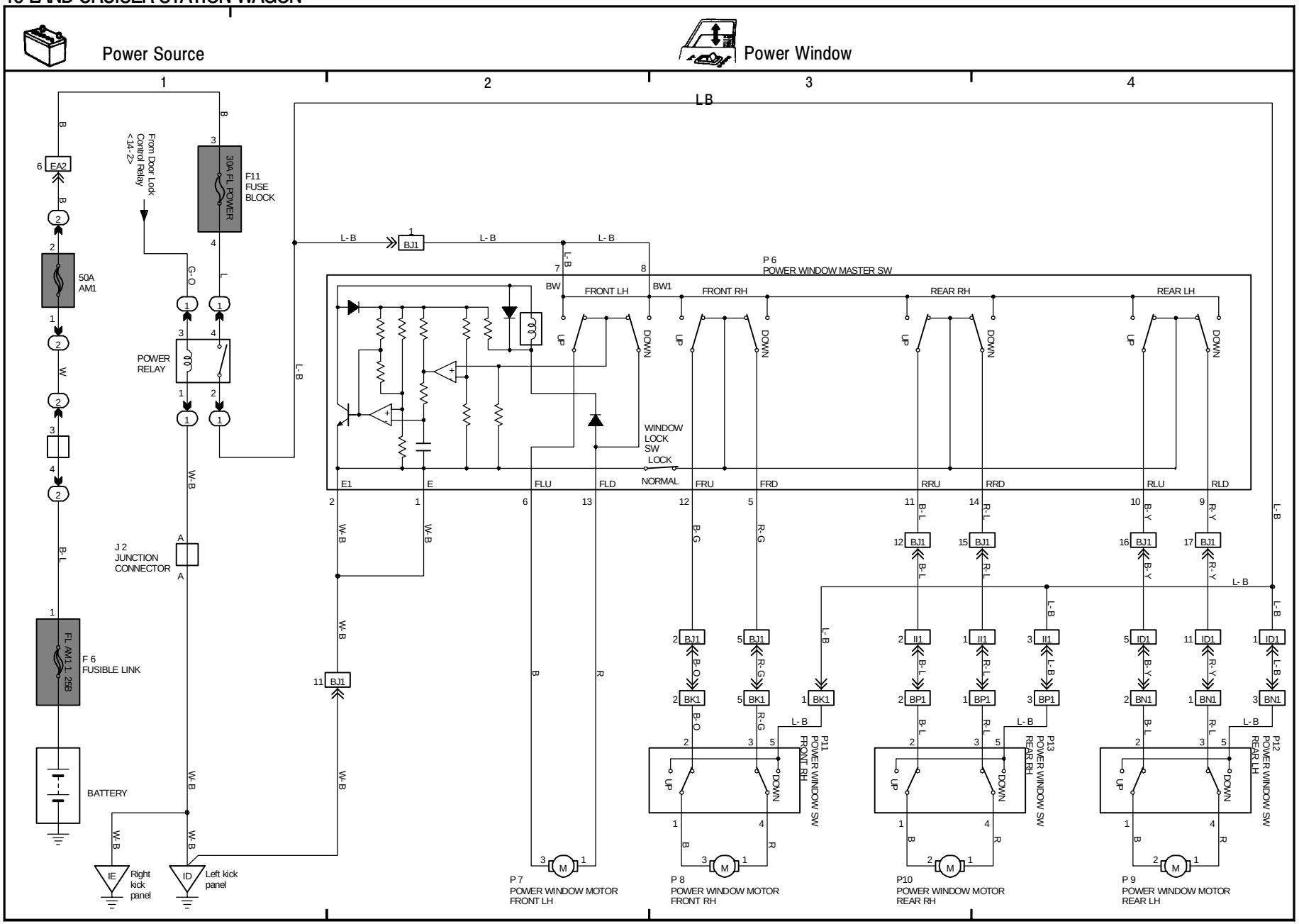

K

Brought to you by BirfMark

Brought to you by BirfMark

14 LAND CRUISER STATION WAGON

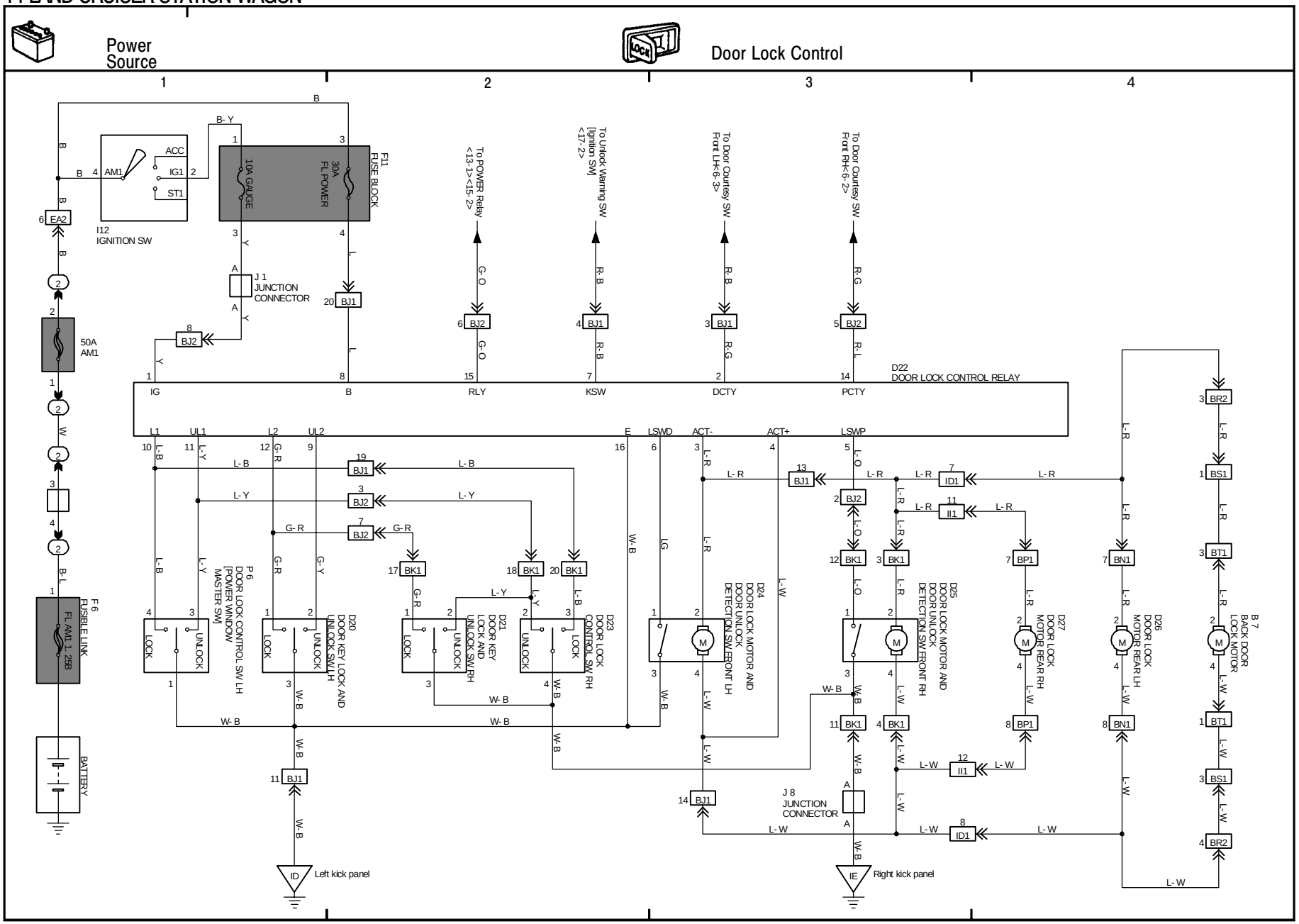

Brought to you by BirfMark

Brought to you by BirfMark

15 LAND CRUISER STATION WAGON

Power Source | Moon Roof | Horn

1 | 2 | 3 | 4

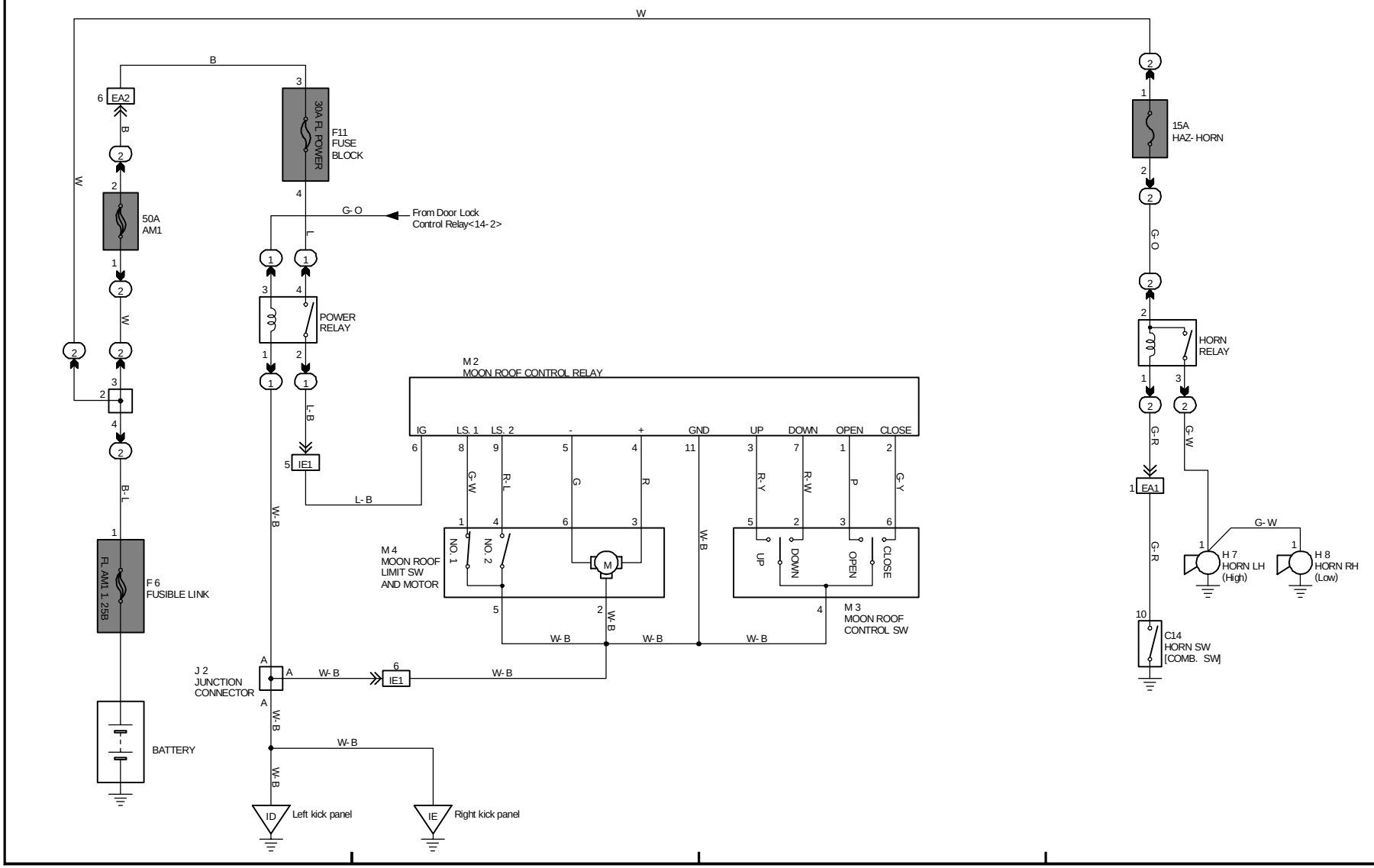

K

Brought to you by BirfMark

Brought to you by BirfMark

16 LAND CRUISER STATION WAGON

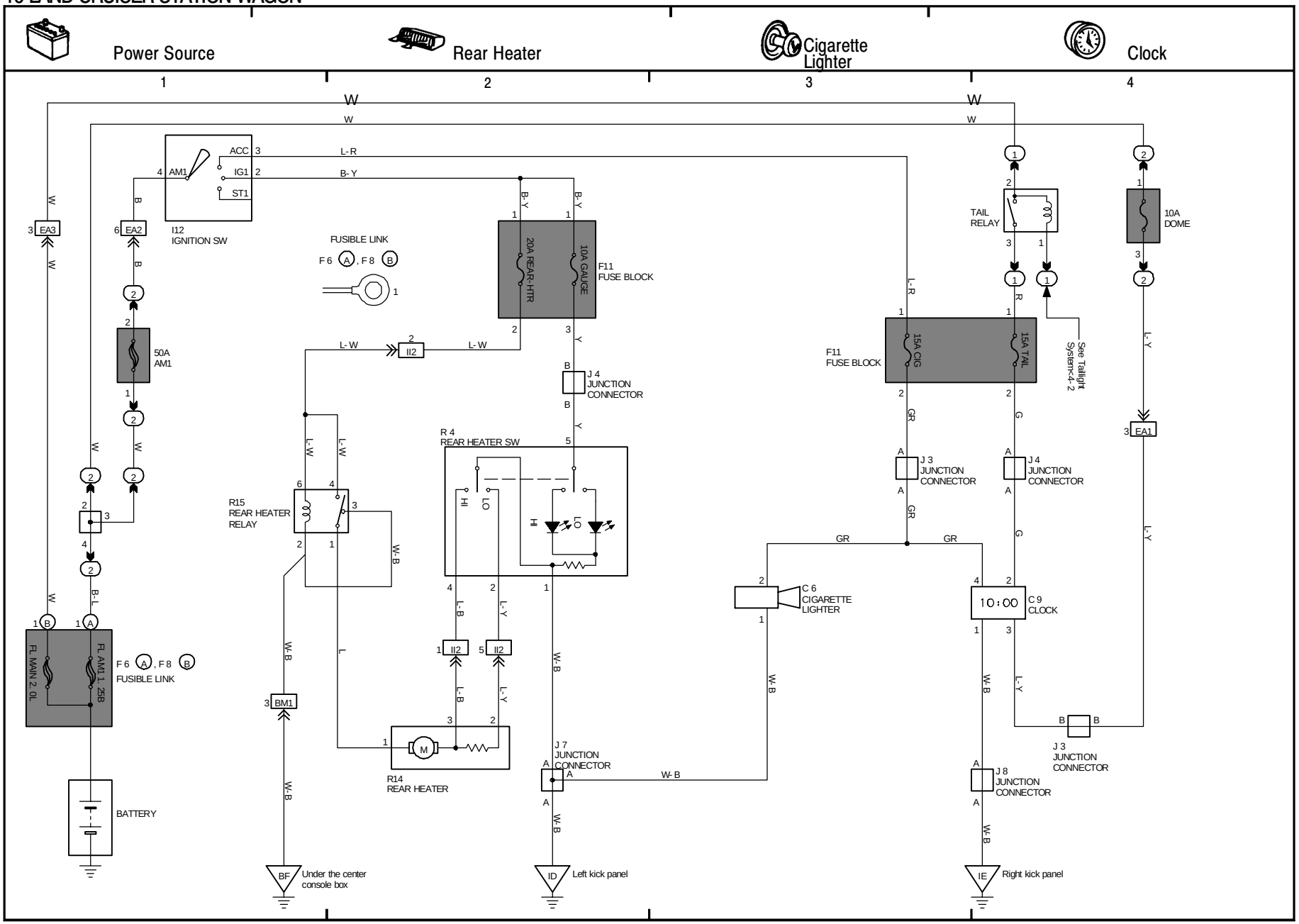

Brought to you by BirfMark

Brought to you by BirfMark

17 LAND CRUISER STATION WAGON

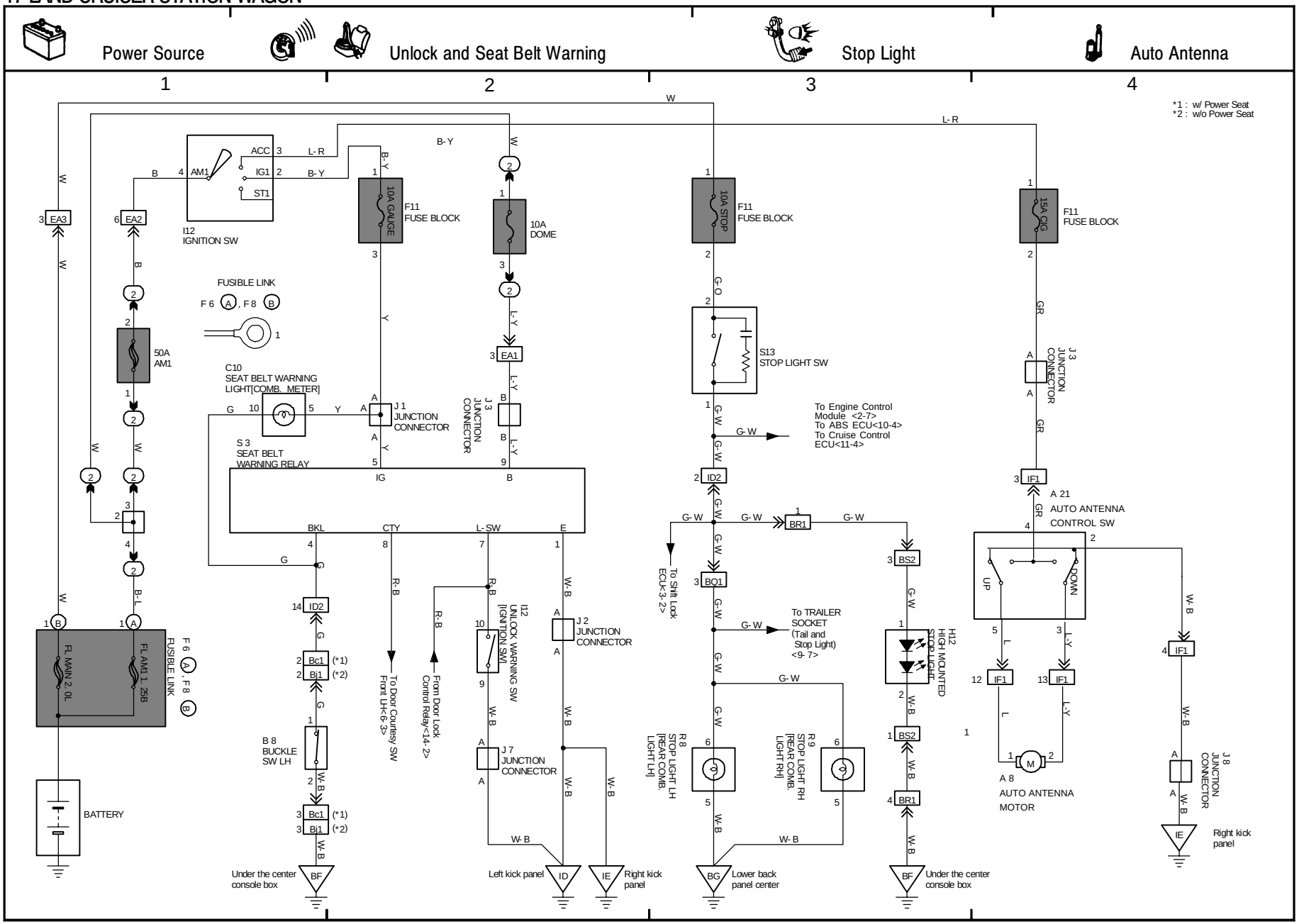

Brought to you by BirfMark

Brought to you by BirfMark

18 LAND CRUISER STATION WAGON

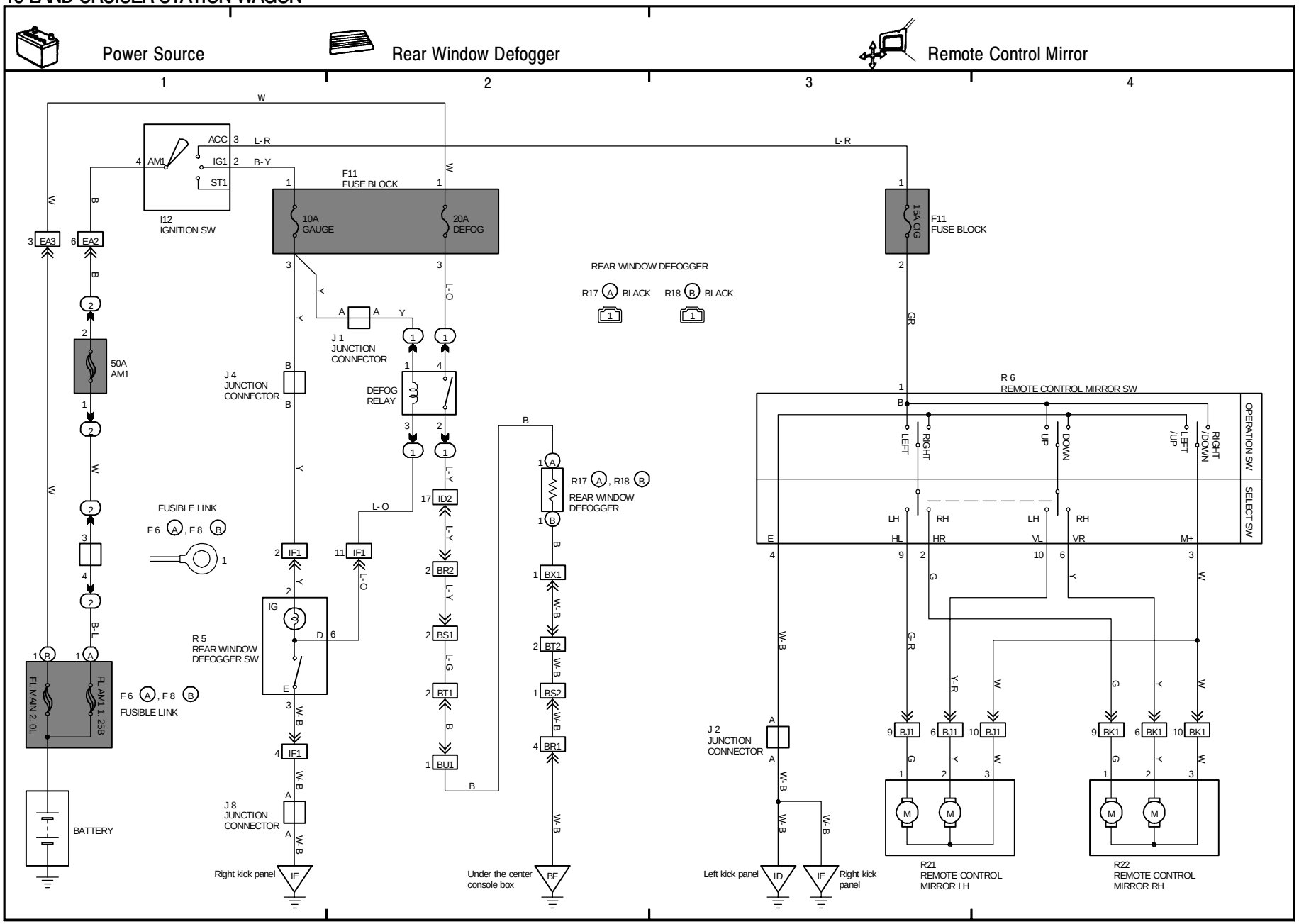

Brought to you by BirfMark

Brought to you by BirfMark

19 LAND CRUISER STATION WAGON

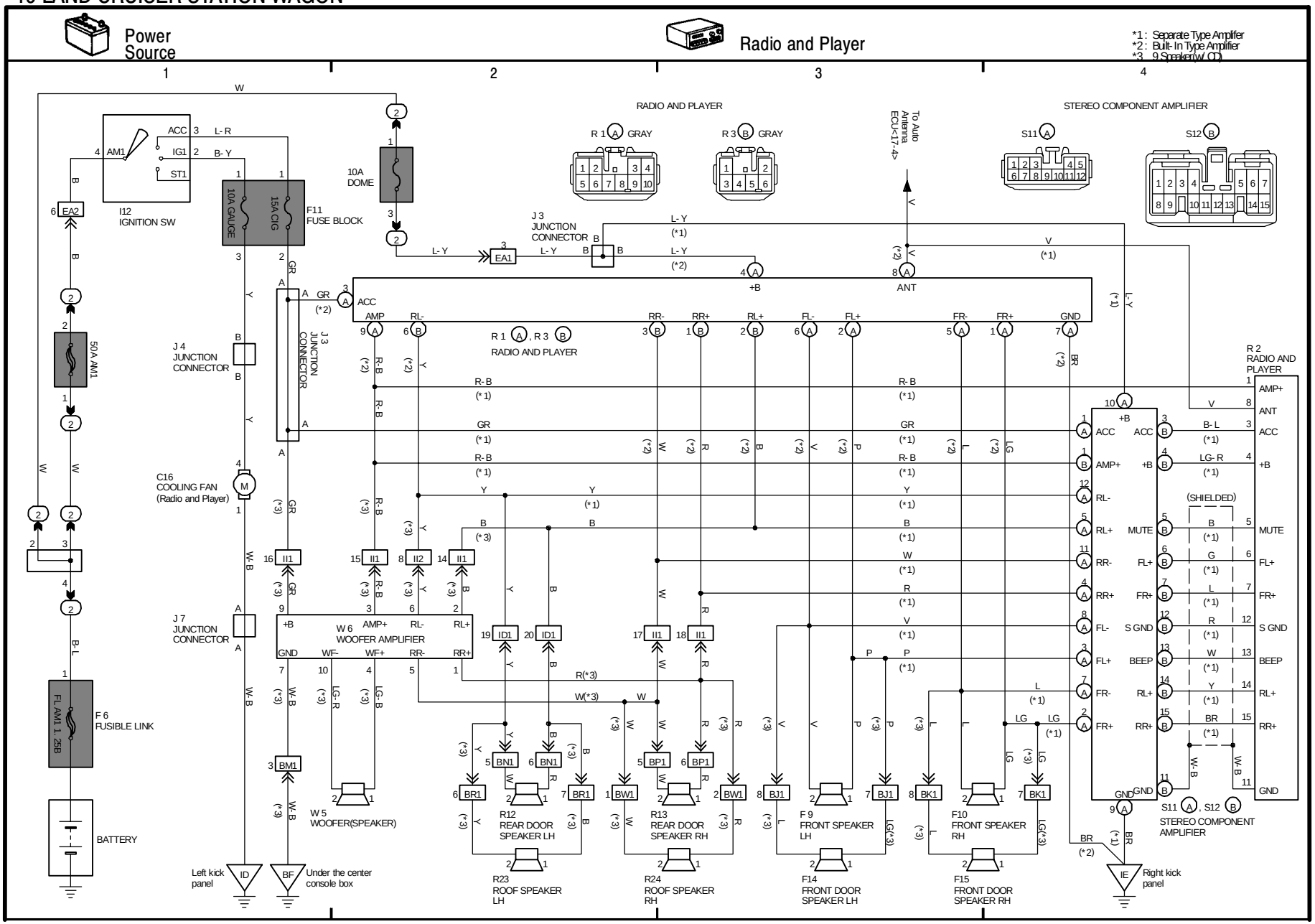

Brought to you by BirfMark

Brought to you by BirfMark

20 LAND CRUISER STATION WAGON

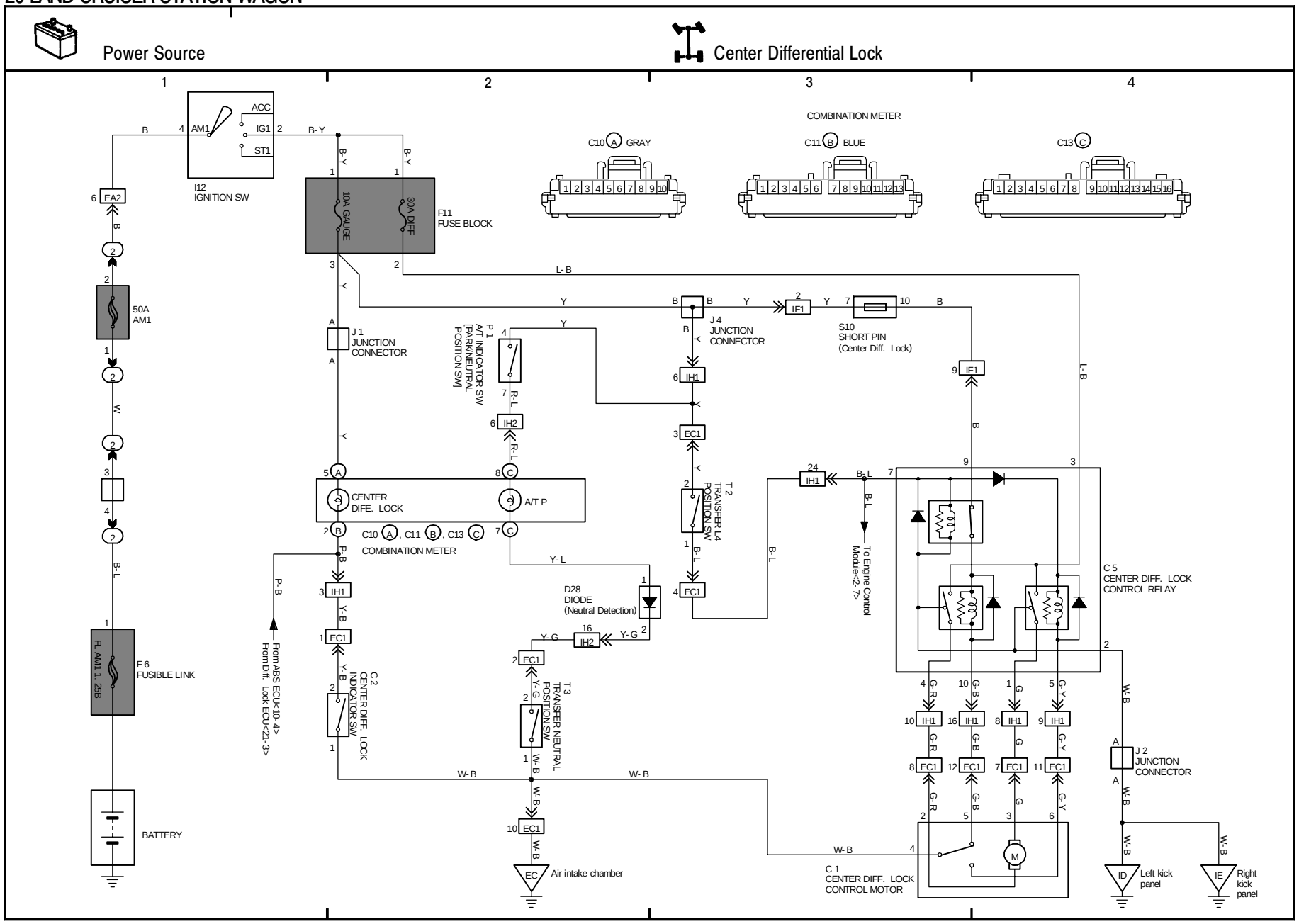

Brought to you by BirfMark

Brought to you by BirfMark

21 LAND CRUISER STATION WAGON

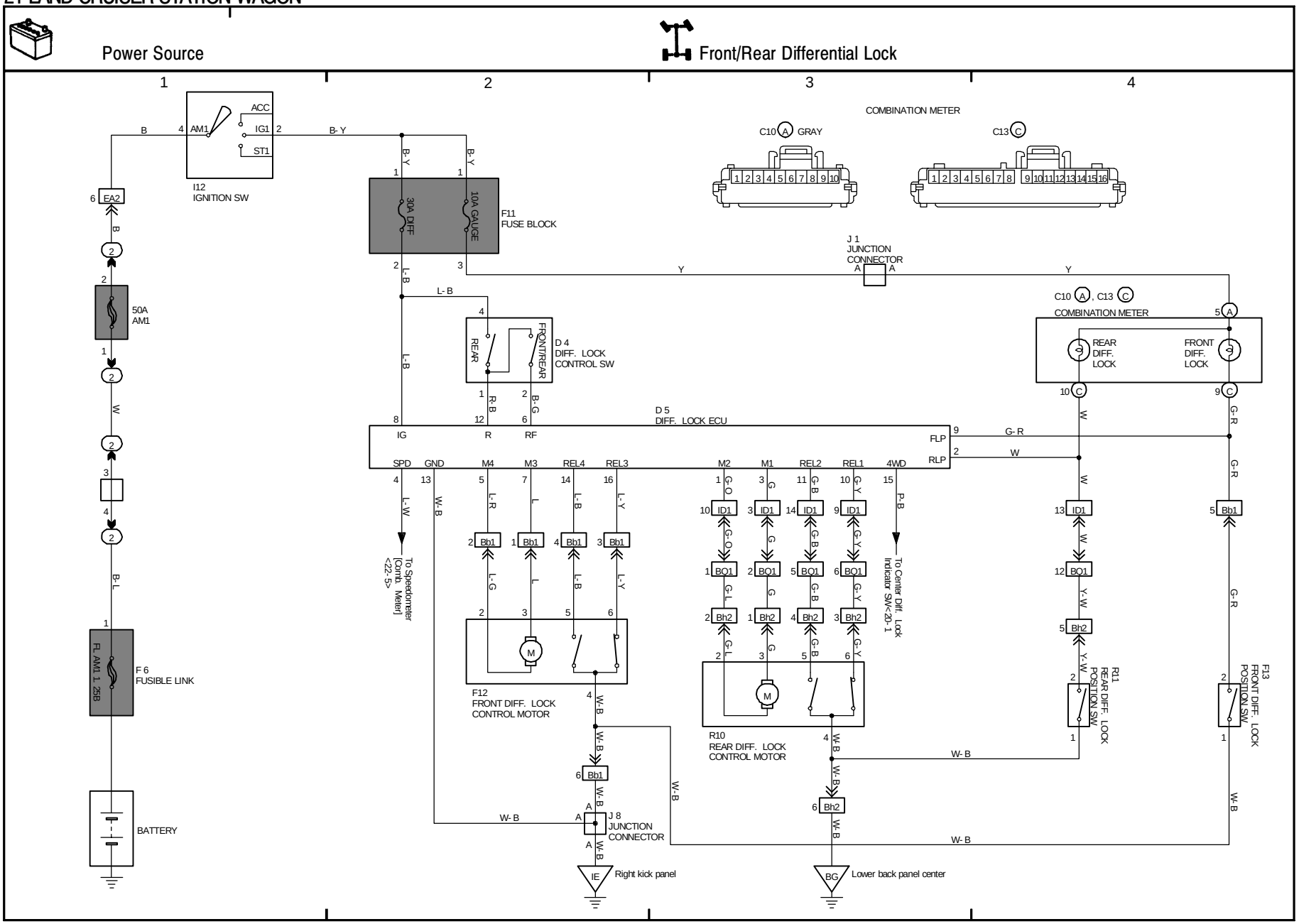

Brought to you by BirfMark

Brought to you by BirfMark

(Cont. next page)

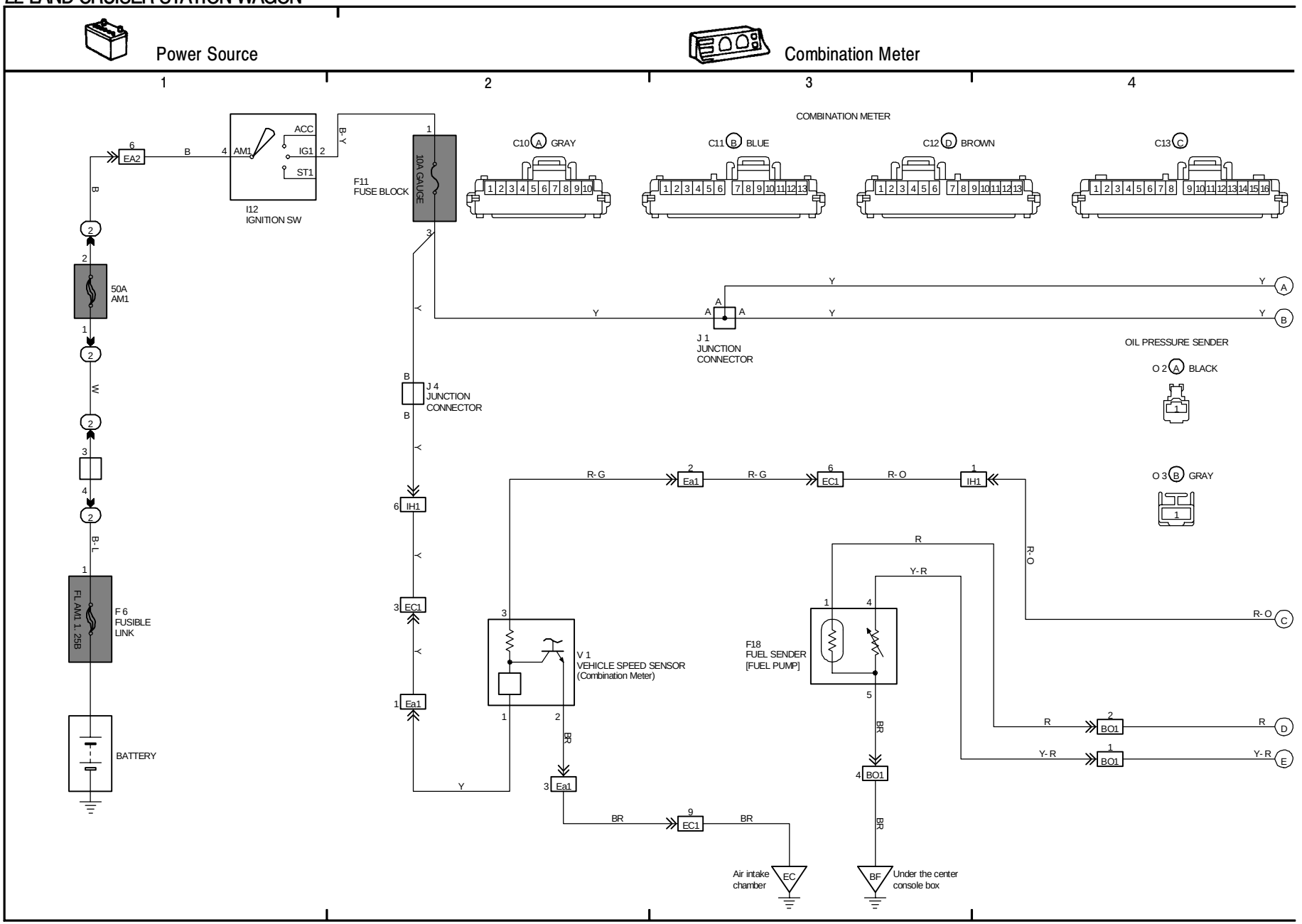

Brought to you by BirfMark

Brought to you by BirfMark

22 LAND CRUISER STATION WAGON(Cont' d)

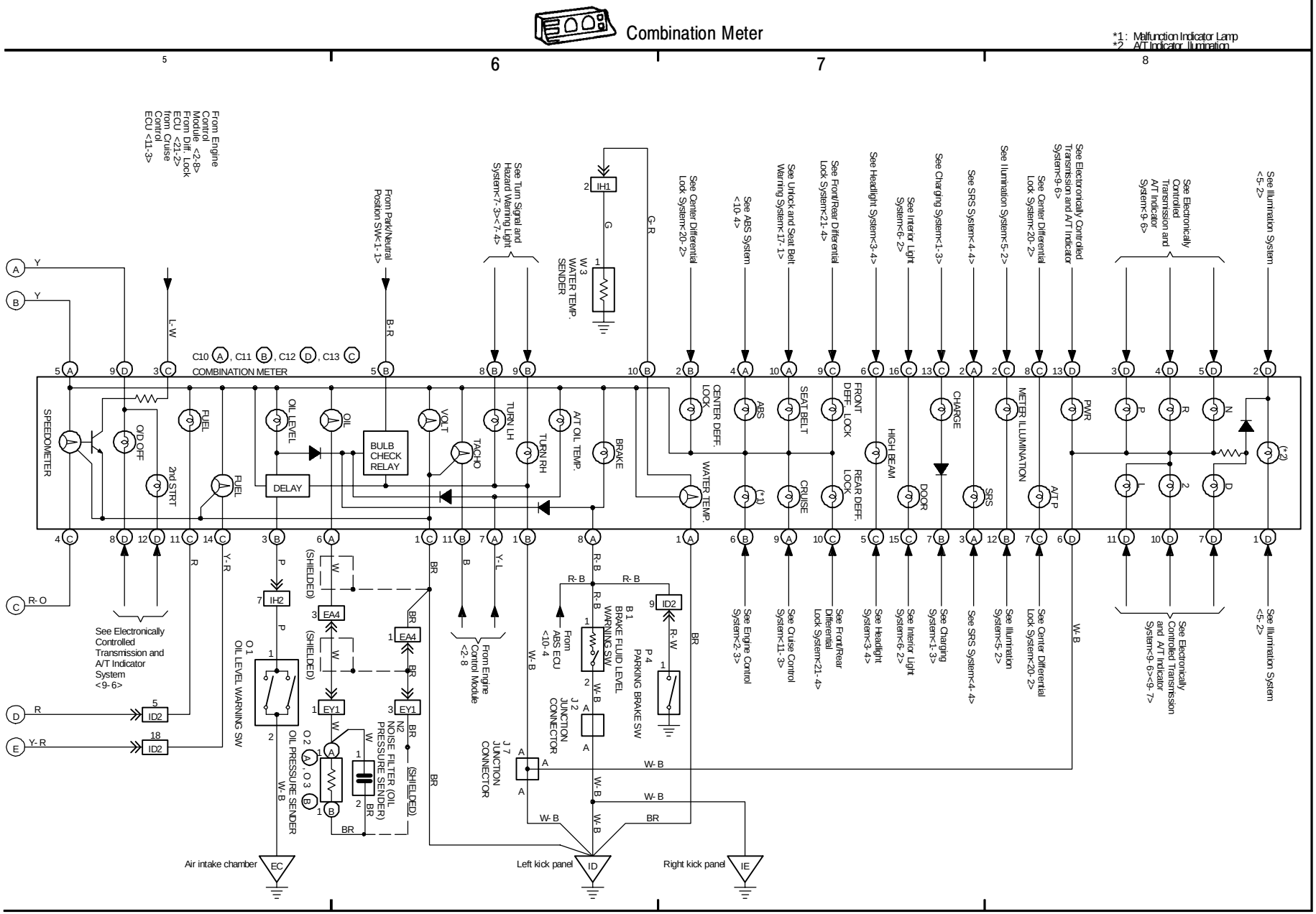

K

Brought to you by BirfMark

Brought to you by BirfMark

23 LAND CRUISER STATION WAGON

(Cont. next page)

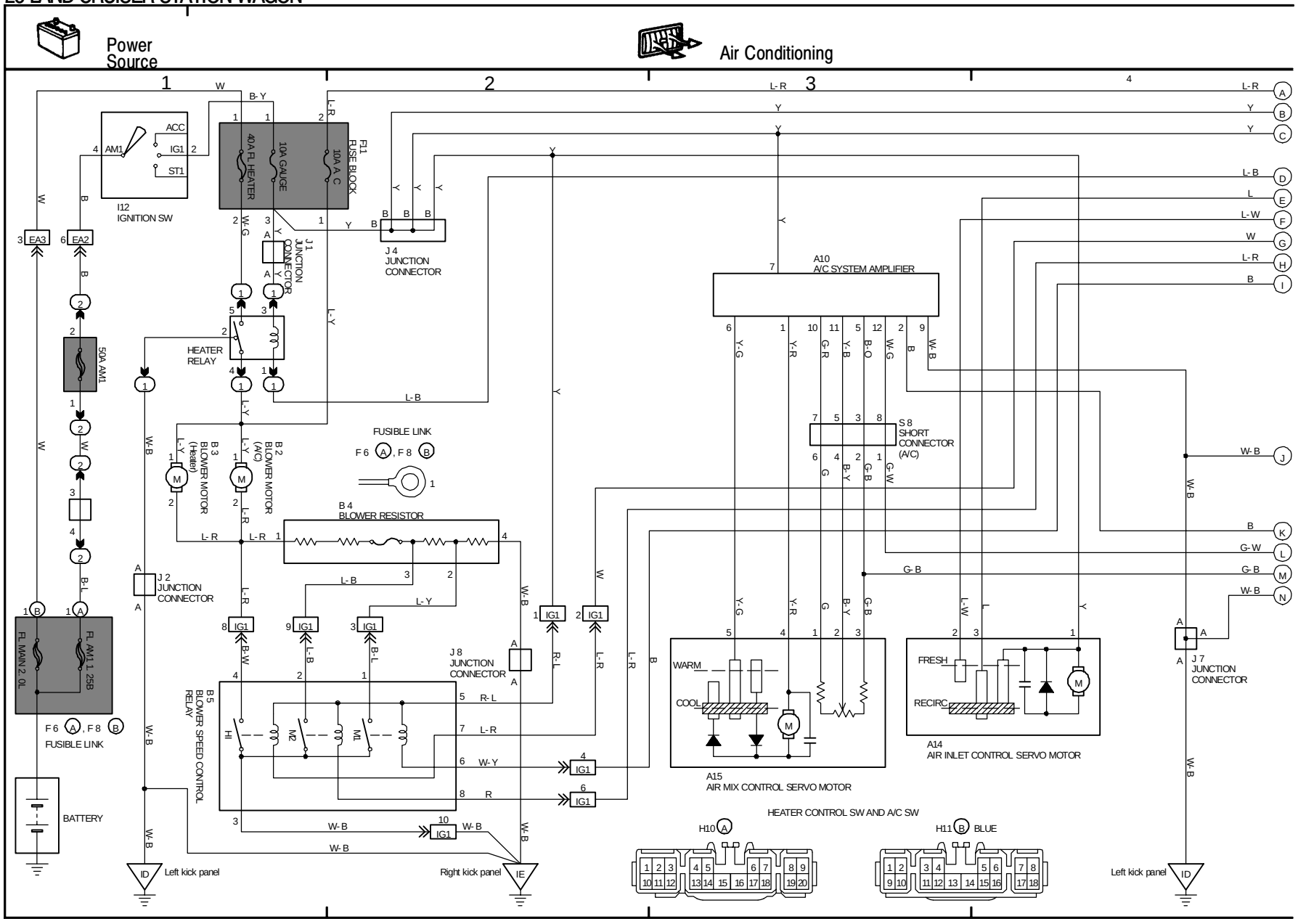

Brought to you by BirfMark

Brought to you by BirfMark

23 LAND CRUISER STATION WAGON(Cont' d)

Air Conditioning

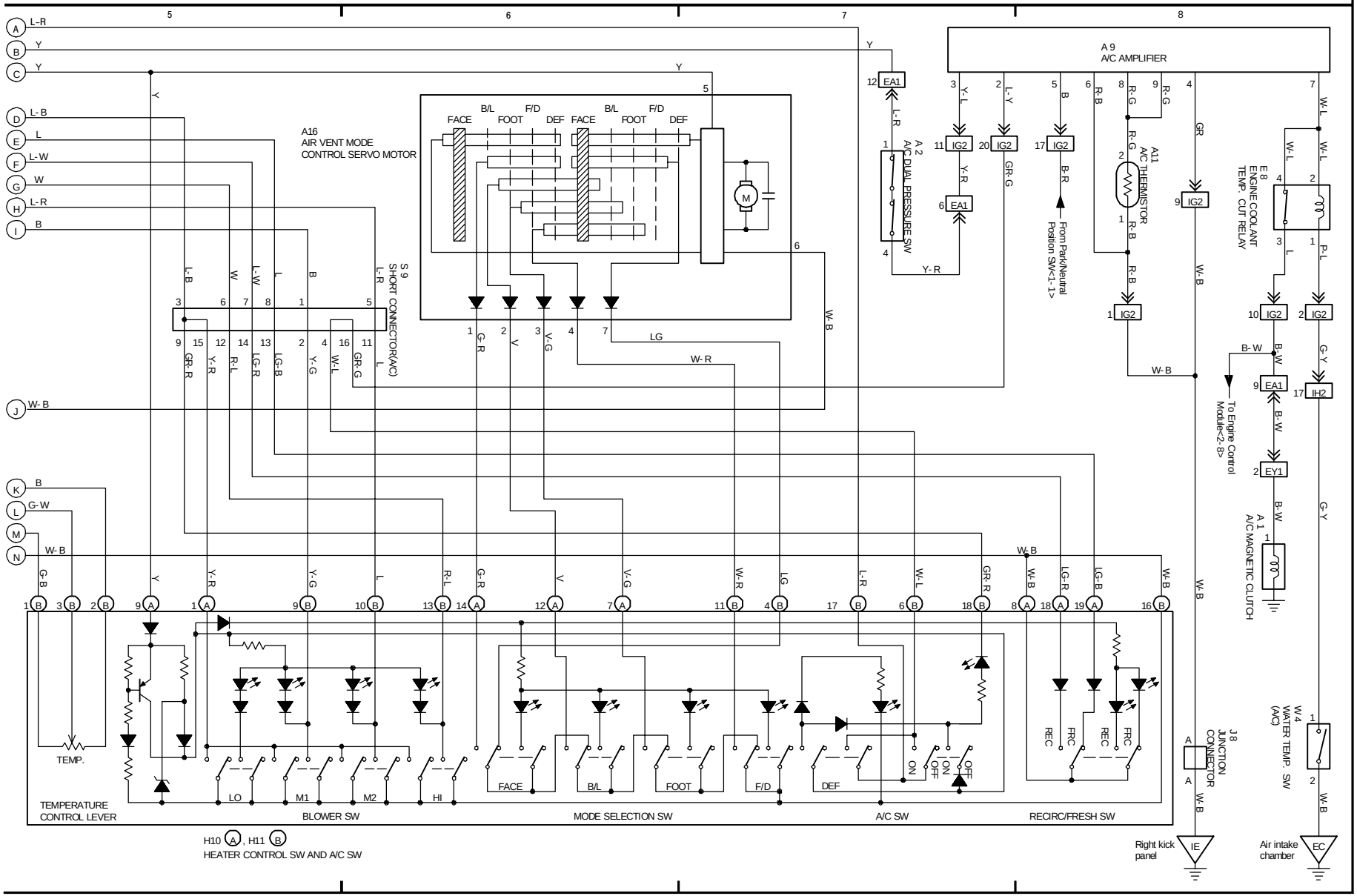

K

Brought to you by BirfMark